Compal Confidential

DFL32 Schematics Document

Banias/Dothan uFCPGA with Intel 855GME + ICH4-M

2003-03-24

REV:1.0

THIS SHEET OF ENGINEERING DRAWING IS THE PROPRIETARY PROPERTY OF COMPAL ELECTRONICS, INC. AND CONTAINS CONFIDENTIAL AND TRADE SECRET INFORMATION. THIS SHEET MAY NOT BE TRANSFERED FROM THE CUSTODY OF THE COMPETENT DIVISION OF R&D DEPARTMENT EXCEPT AS AUTHORIZED BY COMPAL ELECTRONICS, INC. NEITHER THIS SHEET NOR THE INFORMATION IT CONTAINS

Compal Electronics, Inc.		
Title	SCHEMATIC M/B LA-2242	
Size	Document Number 401289	Rev 2A
Date: 星期一, 四月 19, 2004	Sheet 1 of 101	

Compal Confidential

Model Name : DFL32
File Name : LA-2242

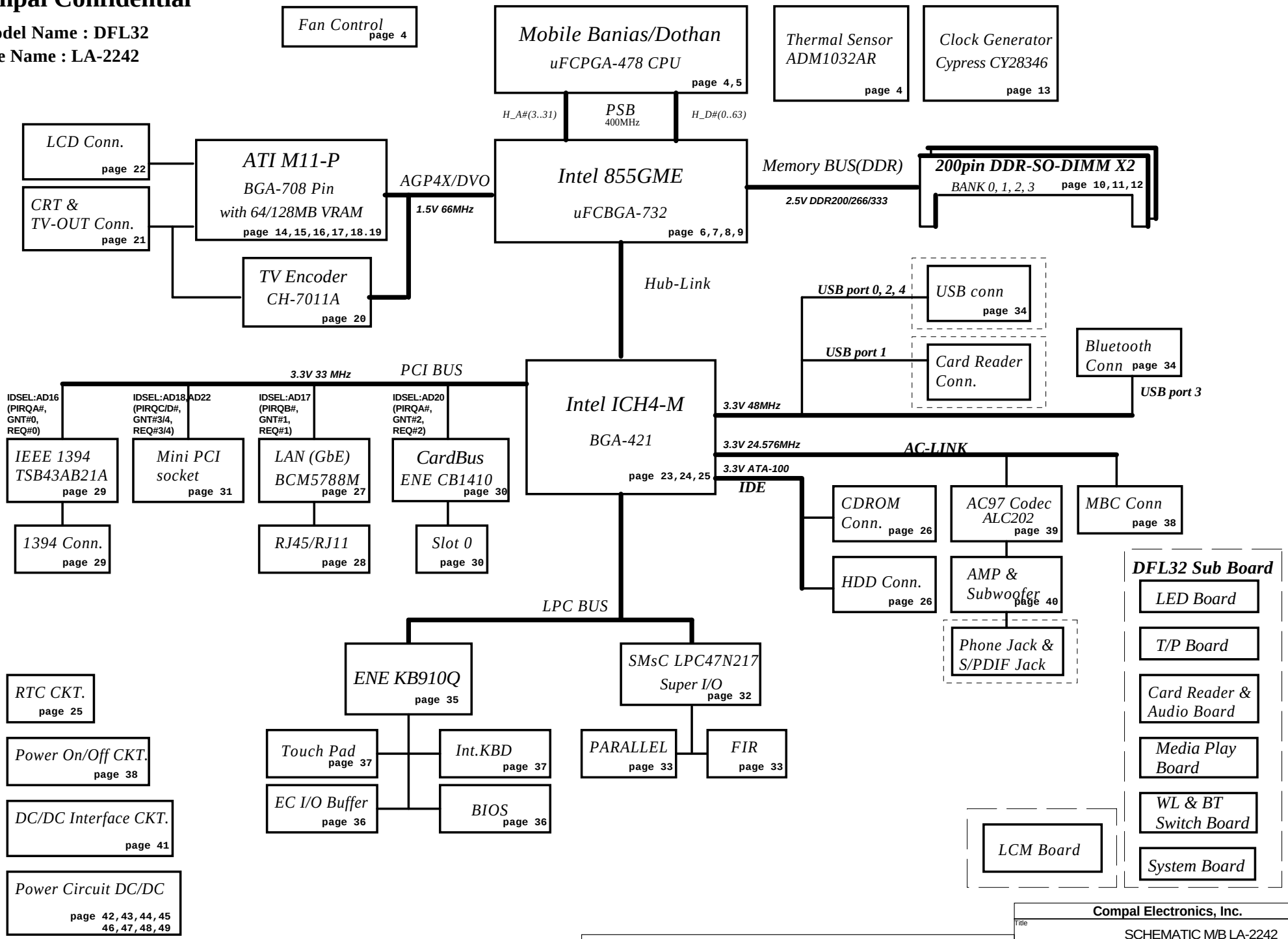

THIS SHEET OF ENGINEERING DRAWING IS THE PROPRIETARY PROPERTY OF COMPAL ELECTRONICS, INC. AND CONTAINS CONFIDENTIAL AND TRADE SECRET INFORMATION. THIS SHEET MAY NOT BE TRANSFERED FROM THE CUSTODY OF THE COMPETENT DIVISION OF R&D DEPARTMENT EXCEPT AS AUTHORIZED BY COMPAL ELECTRONICS, INC. NEITHER THIS SHEET NOR THE INFORMATION IT CONTAINS MAY BE USED BY OR DISCLOSED TO ANY THIRD PARTY WITHOUT PRIOR WRITTEN CONSENT OF COMPAL ELECTRONICS, INC.

Compal Electronics, Inc.	
Title	SCHEMATIC M/B LA-2242
Size	Document Number 401289 — Rev 2A
Date: 星期一, 四月 19, 2004	Sheet 2 of 101

Voltage Rails

Power Plane	Description	S0-S1	S3	S5
VIN	Adapter power supply (19V)	N/A	N/A	N/A
B+	AC or battery power rail for power circuit	N/A	N/A	N/A
+CPU_CORE	Core voltage for CPU	ON	OFF	OFF
+VCCP	1.05V rail for Processor I/O	ON	OFF	OFF
+1.25VS	1.25V switched power rail for DDR Vtt	ON	OFF	OFF
+1.2VS	1.2V switched power rail for VGA core power	ON	OFF	OFF
+1.35VS	1.35V switched power rail for GMCH core power	ON	OFF	OFF
+1.5VALW	1.5V always on power rail	ON	ON	ON*
+1.5VS	1.5V switched power rail for AGP interface	ON	OFF	OFF
+1.8VS	1.8V switched power rail for CPU PLL & Hub-Link	ON	OFF	OFF
+2.5V	2.5V power rail for system DDR	ON	ON	OFF
+2.5VS	2.5V switched power rail	ON	OFF	OFF
+3VALW	3.3V always on power rail	ON	ON	ON*
+3V	3.3V switched power rail	ON	ON	OFF
+3VS	3.3V switched power rail	ON	OFF	OFF
+5VALW	5V always on power rail	ON	ON	ON*
+5VS	5V switched power rail	ON	OFF	OFF
+12VALW	12V always on power rail	ON	ON	ON*
RTCVCC	RTC power	ON	ON	ON

Note : ON* means that this power plane is ON only with AC power available, otherwise it is OFF.

Internal PCI Devices

DEVICE	PCI Device ID
HUB	D30
USB	D29
AC97 MODEM	D31
AC97	D31
ATA 100	D31
ETHERNET	D8 (AD24)
LPC I/F	D31
SMBUS	D31

I2C / SMBUS ADDRESSING

DEVICE	HEX	ADDRESS
DDR SO-DIMM 0	A0	1010000X
DDR SO-DIMM 1	A2	1010001X
CLOCK GENERATOR (EXT.)	D2	1101001X

External PCI Devices

DEVICE	PCI Device ID	IDSEL #	REQ/GNT #	PIRQ
1394	D0	AD16	0	E
LAN	D1	AD17	1	F
CARD BUS	D4	AD20	2	A
Wireless LAN	D2	AD18	3	G
Mini-PCI	D6	AD22	4	H
AGP BUS	N/A	AGP_DEVSEL#	N/A	A

Symbol note:

:means digital ground.

:means analog ground.

@ :means reserved.

AS2010,AS2020 Compare Table

Item	* AS2020	AS2010(ATI)	AS2010(UMA)	Page
VGA	ATI M11P	ATI M11P	UMA	7, 9, 14, 15, 16, 17, 21, 22, 38
VRAM	128MB	64MB	N/A	14, 18, 19
TV Encoder	N/A	N/A	CH7011A	20
LAN	BCM5788M(GbE)	BCM4401(10/100)	BCM4401(10/100)	27, 28
S/PDIF	YES	N/A	N/A	N/A
Card Reader	YES	YES	N/A	N/A
Sub Woofer	YES	YES	N/A	33
LCM/B	YES	N/A	N/A	37, 39
MEDIA/B	YES	N/A	N/A	40

Board ID/ Project ID Table for AD channel

Vcc	3.3V +/- 5%
Ra	10K +/- 5%

BID/PID	Rb/Rc	V_{AD_BID} min	V_{AD_BID} typ	V_{AD_BID} max
0	0	0 V	0 V	0 V
1	8.2K +/- 5%	1.412 V	1.486 V	1.560 V
2	18K +/- 5%	2.015 V	2.121 V	2.227 V
3	33K +/- 5%	2.406 V	2.533 V	2.659 V
4	56K +/- 5%	2.660 V	2.800 V	2.940 V
5	NC	3.135 V	3.300 V	3.465 V

Board ID	PCB Revision
0	0.1
1	0.2
2	0.3
* 3	0.4
4	
5	
6	
7	

Project ID	Project
* 0	Drongo2
1	Drongo3
2	Drongo4
3	
4	
5	
6	
7	

THIS SHEET OF ENGINEERING DRAWING IS THE PROPRIETARY PROPERTY OF COMPAL ELECTRONICS, INC. AND CONTAINS CONFIDENTIAL AND TRADE SECRET INFORMATION. THIS SHEET MAY NOT BE TRANSFERED FROM THE CUSTODY OF THE COMPETENT DIVISION OF R&D DEPARTMENT EXCEPT AS AUTHORIZED BY COMPAL ELECTRONICS, INC. NEITHER THIS SHEET NOR THE INFORMATION IT CONTAINS MAY BE USED BY OR DISCLOSED TO ANY THIRD PARTY WITHOUT PRIOR WRITTEN CONSENT OF COMPAL ELECTRONICS, INC.

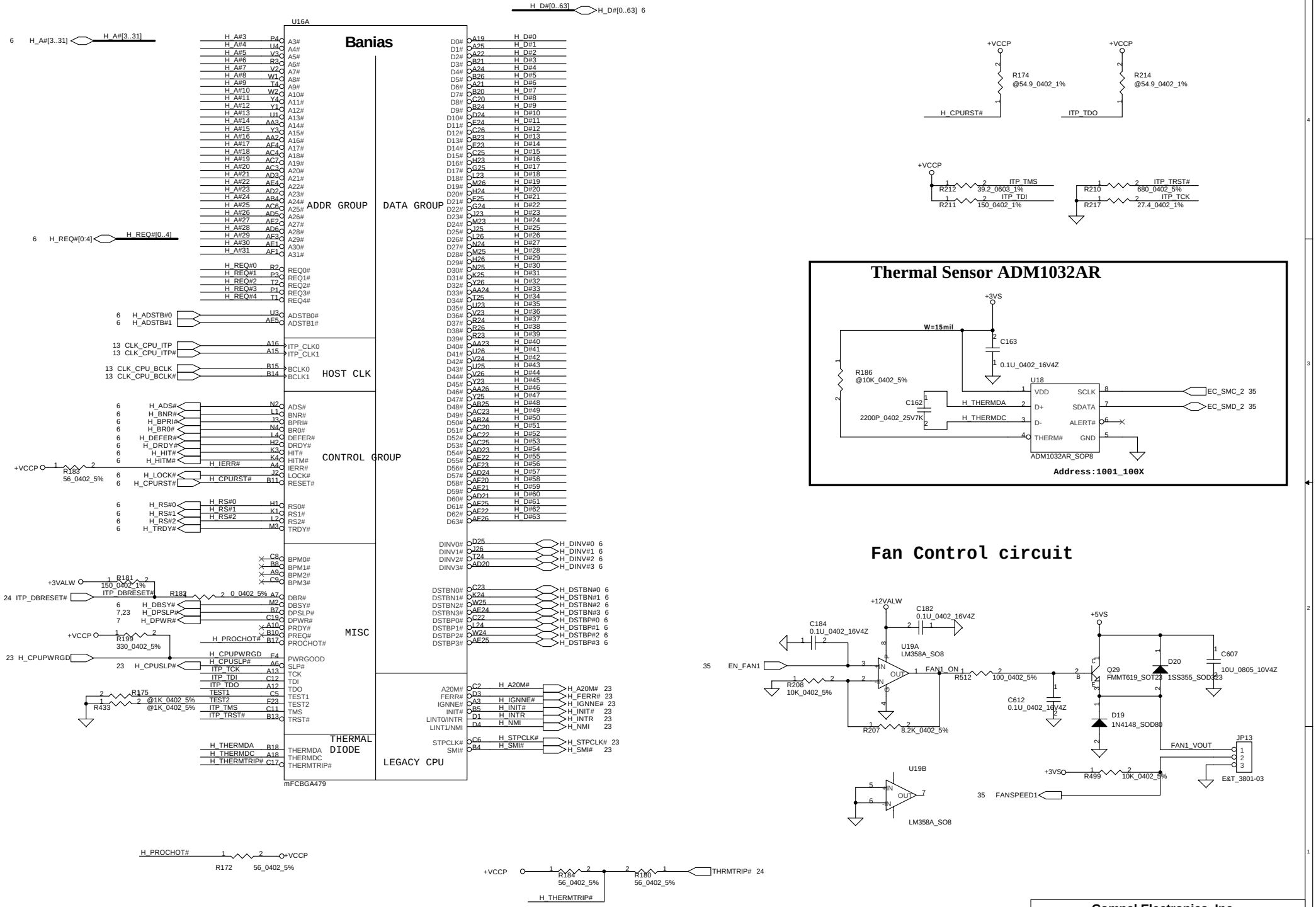

THIS SHEET OF ENGINEERING DRAWING IS THE PROPRIETARY PROPERTY OF COMPAL ELECTRONICS, INC. AND CONTAINS CONFIDENTIAL AND TRADE SECRET INFORMATION. THIS SHEET MAY NOT BE TRANSFERED FROM THE CUSTODY OF THE COMPETENT DIVISION OF R&D DEPARTMENT EXCEPT AS AUTHORIZED BY COMPAL ELECTRONICS, INC. NEITHER THIS SHEET NOR THE INFORMATION IT CONTAINS MAY BE USED BY OR DISCLOSED TO ANY THIRD PARTY WITHOUT PRIOR WRITTEN CONSENT OF COMPAL ELECTRONICS, INC.

Compal Electronics, Inc.

Title: SCHEMATIC M/B LA-2242

Size: | Document Number: 401289 | Rev: 2A

Date: 星期一, 四月 19, 2004 | Sheet 4 of 101

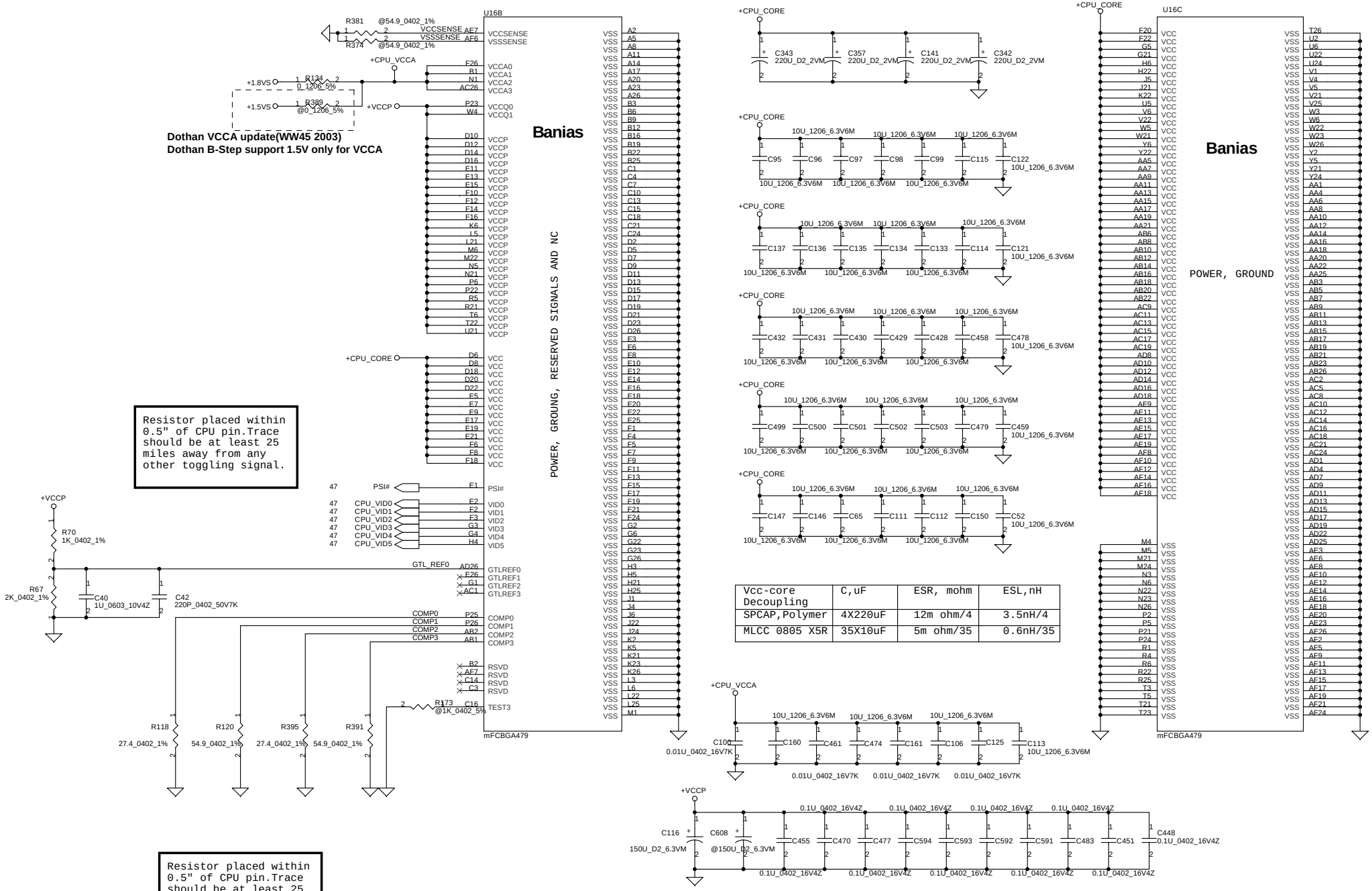

Vcc-core Decoupling	C,uF	ESR, mohm	ESL,nH
SPCAP,Polymer	4X220uF	12m ohm/4	3.5nH/4
MLCC 0805 X5R	35X10uF	5m ohm/35	0.6nH/35

THIS SHEET OF ENGINEERING DRAWING IS THE PROPRIETARY PROPERTY OF COMPAL ELECTRONICS, INC. AND CONTAINS CONFIDENTIAL AND TRADE SECRET INFORMATION. THIS SHEET MAY NOT BE TRANSFERED FROM THE CUSTODY OF THE COMPETENT DIVISION OF R&D DEPARTMENT EXCEPT AS AUTHORIZED BY COMPAL ELECTRONICS, INC. NEITHER THIS SHEET NOR THE INFORMATION IT CONTAINS MAY BE USED BY OR DISCLOSED TO ANY THIRD PARTY WITHOUT PRIOR WRITTEN CONSENT OF COMPAL ELECTRONICS, INC.

Compal Electronics, Inc.

Title: SCHEMATIC M/B LA-2242

Size | Document Number: 401289 | Rev 2A

Date: 星期一, 四月 19, 2004 | Sheet 5 of 101

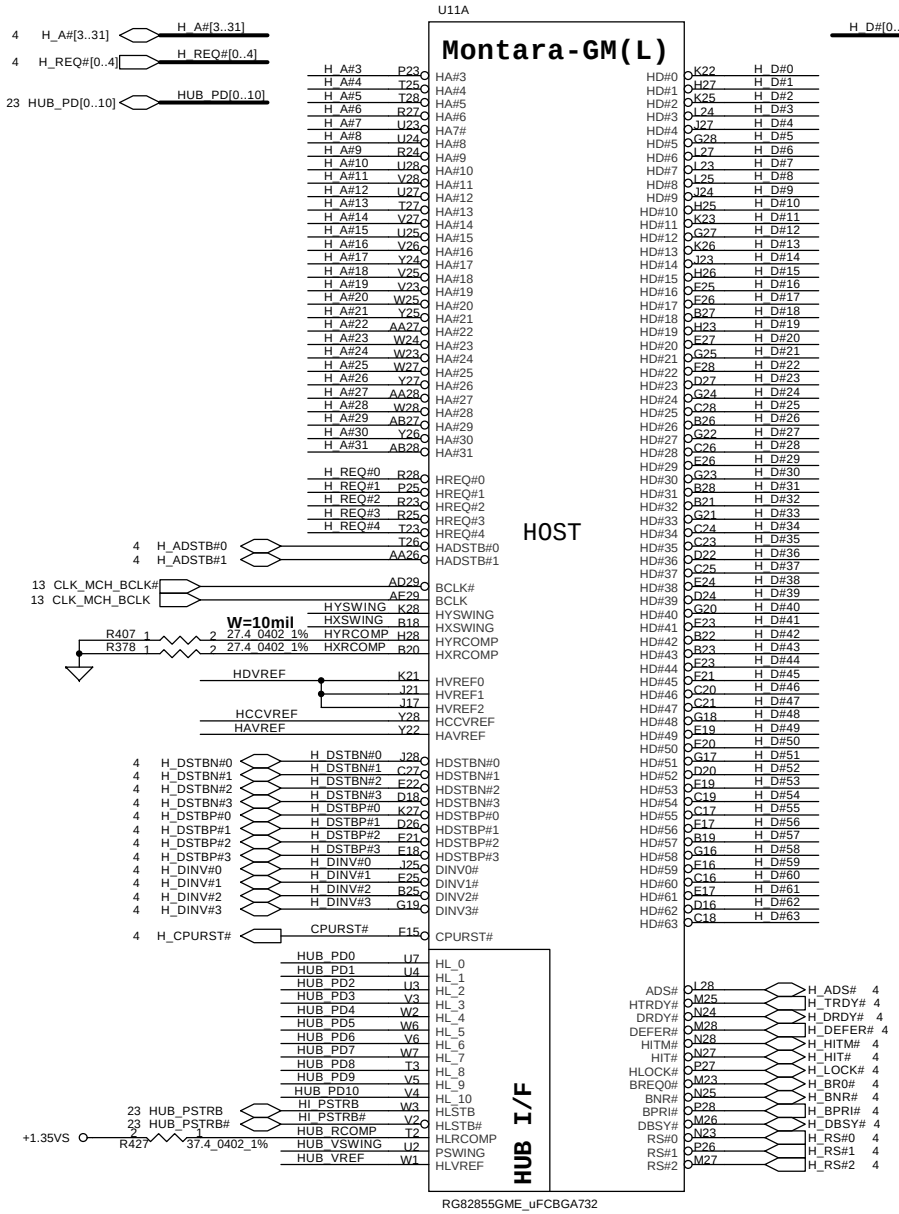

HOST REF VOLTAGE

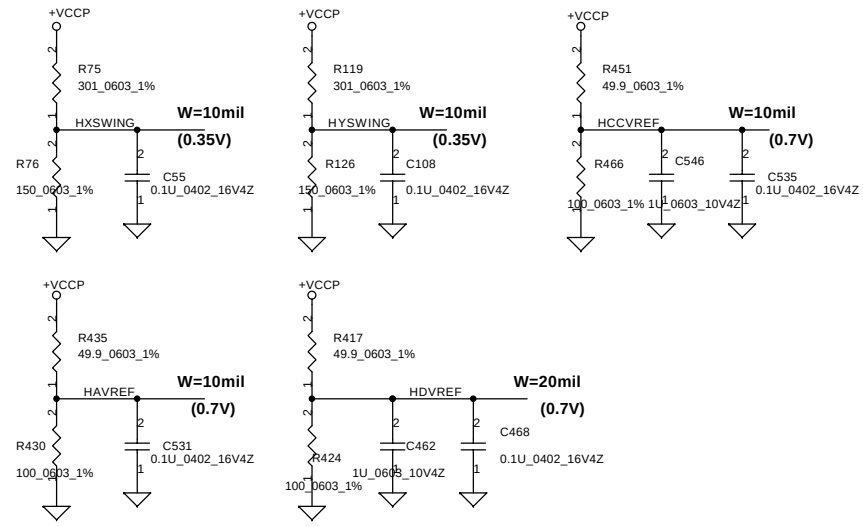

HUB I/F REF VOLTAGE

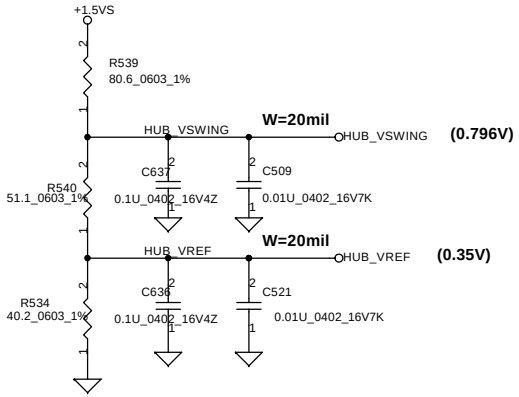

THIS SHEET OF ENGINEERING DRAWING IS THE PROPRIETARY PROPERTY OF COMPAL ELECTRONICS, INC. AND CONTAINS CONFIDENTIAL AND TRADE SECRET INFORMATION. THIS SHEET MAY NOT BE TRANSFERED FROM THE CUSTODY OF THE COMPETENT DIVISION OF R&D DEPARTMENT EXCEPT AS AUTHORIZED BY COMPAL ELECTRONICS, INC. NEITHER THIS SHEET NOR THE INFORMATION IT CONTAINS MAY BE USED BY OR DISCLOSED TO ANY THIRD PARTY WITHOUT PRIOR WRITTEN CONSENT OF COMPAL ELECTRONICS, INC.

Compal Electronics, Inc.	
Title	SCHEMATIC M/B LA-2242
Size	Document Number 401289 — Rev 2A
Date: 星期一, 四月 19, 2004	Sheet 6 of 101

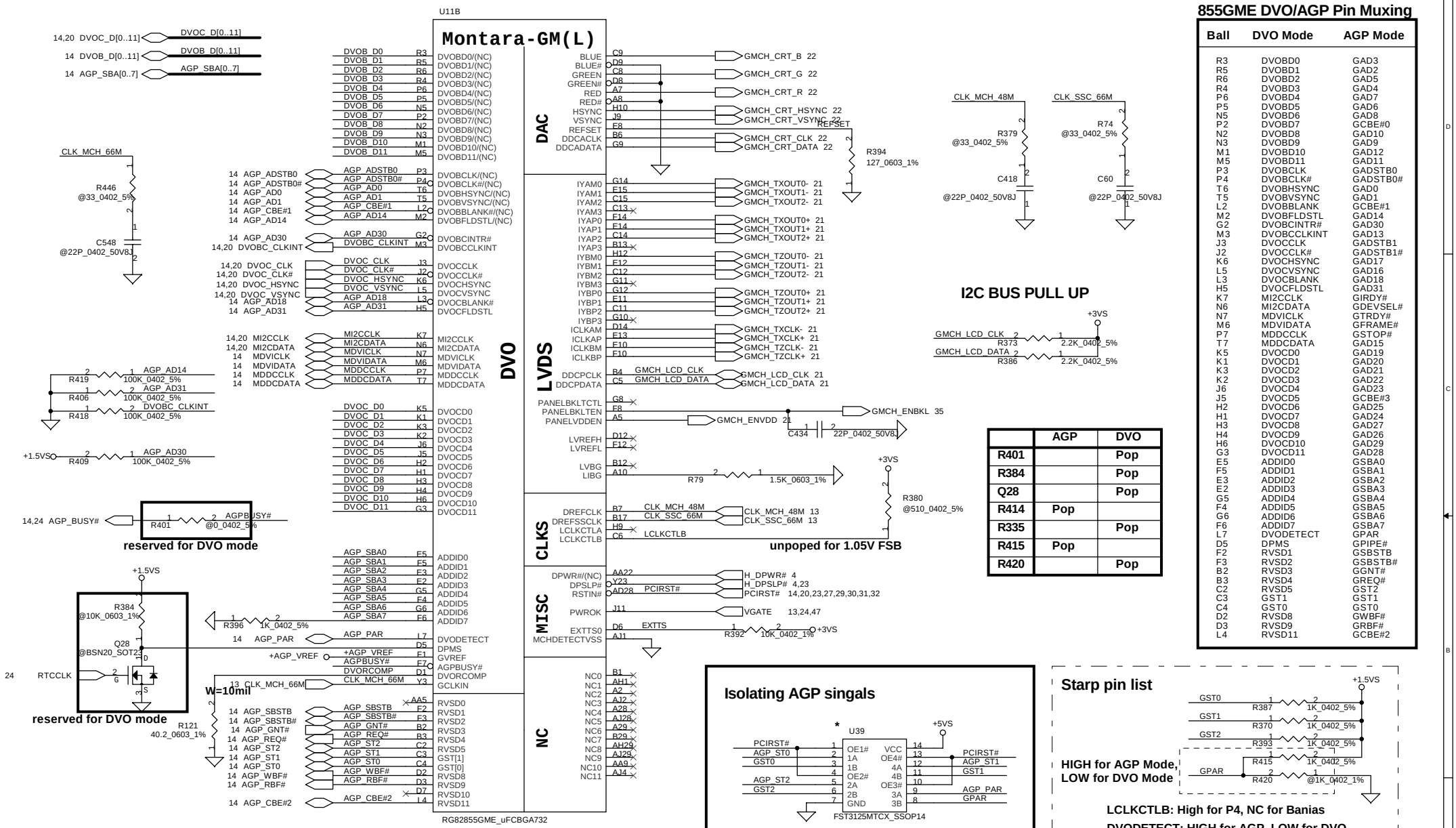

855GME DVO/AGP Pin Muxing

Ball	DVO Mode	AGP Mode
R3	DVOBD0	GAD3
R5	DVOBD1	GAD2
R6	DVOBD2	GAD5
R4	DVOBD3	GAD4
P6	DVOBD4	GAD7
P5	DVOBD5	GAD6
N5	DVOBD6	GAD8
P2	DVOBD7	GCBE#0
N2	DVOBD8	GAD10
N3	DVOBD9	GAD9
M1	DVOBD10	GAD12
M5	DVOBD11	GAD11
P3	DVOBCLK	GADSTB0
P4	DVOBCLK#	GADSTB0#
T6	DVOBHSYNC	GAD0
T5	DVOBVSYNC	GAD1
L2	DVOBBLANK	GCBE#1
M2	DVOBFLDSTL	GAD14
G2	DVOBCINTR#	GAD30
M3	DVOBCCLKINT	GAD13
J3	DVOCCLK	GADSTB1
J2	DVOCCLK#	GADSTB1#
K6	DVOCHSYNC	GAD17
L5	DVOCVSYNC	GAD16
L3	DVOCBLANK	GAD18
H5	DVOCFLDSTL	GAD31
K7	MI2CCLK	GIRDY#
N6	MI2CDATA	GDEVSEL#
N7	MDVICLK	GTRDY#
M6	MDVIDATA	GFRAME#
P7	MDDCCLK	GSTOP#
T7	MDDCDATA	GAD15
K5	DVOCD0	GAD19
K1	DVOCD1	GAD20
K3	DVOCD2	GAD21
K2	DVOCD3	GAD22
J6	DVOCD4	GAD23
J5	DVOCD5	GCBE#3
H2	DVOCD6	GAD25
H1	DVOCD7	GAD24
H3	DVOCD8	GAD27
H4	DVOCD9	GAD26
H6	DVOCD10	GAD29
G3	DVOCD11	GAD28
E5	ADDID0	GSBA0
F5	ADDID1	GSBA1
E3	ADDID2	GSBA2
E2	ADDID3	GSBA3
G5	ADDID4	GSBA4
F4	ADDID5	GSBA5
G6	ADDID6	GSBA6
F6	ADDID7	GSBA7
L7	DVODETECT	GPAR
D5	DPMS	GPIPE#
F2	RVSD1	GSBSTB
F3	RVSD2	GSBSTB#
B2	RVSD3	GGNT#
B3	RVSD4	GREQ#
C2	RVSD5	GST2
C3	GST1	GST1
C4	GST0	GST0
D2	RVSD8	GWBF#
D3	RVSD9	GRBF#
L4	RVSD11	GCBE#2

	AGP	DVO
R401		Pop
R384		Pop
Q28		Pop
R414	Pop	
R335		Pop
R415	Pop	
R420		Pop

LCLKCTLB: High for P4, NC for Banias

DVODETECT: HIGH for AGP, LOW for DVO

ST2	ST1	ST0	PSB/Mem/GFX
0	0	0	400 / 266 / 200
0	0	1	400 / 200 / 200
0	1	0	400 / 200 / 133
1	1	1	400 / 333 / 250 *

THIS SHEET OF ENGINEERING DRAWING IS THE PROPRIETARY PROPERTY OF COMPAL ELECTRONICS, INC. AND CONTAINS CONFIDENTIAL AND TRADE SECRET INFORMATION. THIS SHEET MAY NOT BE TRANSFERED FROM THE CUSTODY OF THE COMPETENT DIVISION OF R&D DEPARTMENT EXCEPT AS AUTHORIZED BY COMPAL ELECTRONICS, INC. NEITHER THIS SHEET NOR THE INFORMATION IT CONTAINS MAY BE USED BY OR DISCLOSED TO ANY THIRD PARTY WITHOUT PRIOR WRITTEN CONSENT OF COMPAL ELECTRONICS, INC.

Compal Electronics, Inc.

Title: SCHEMATIC M/B LA-2242

Size | Document Number: 401289 | Rev: 2A

Date: 星期一, 四月 19, 2004 | Sheet 7 of 101

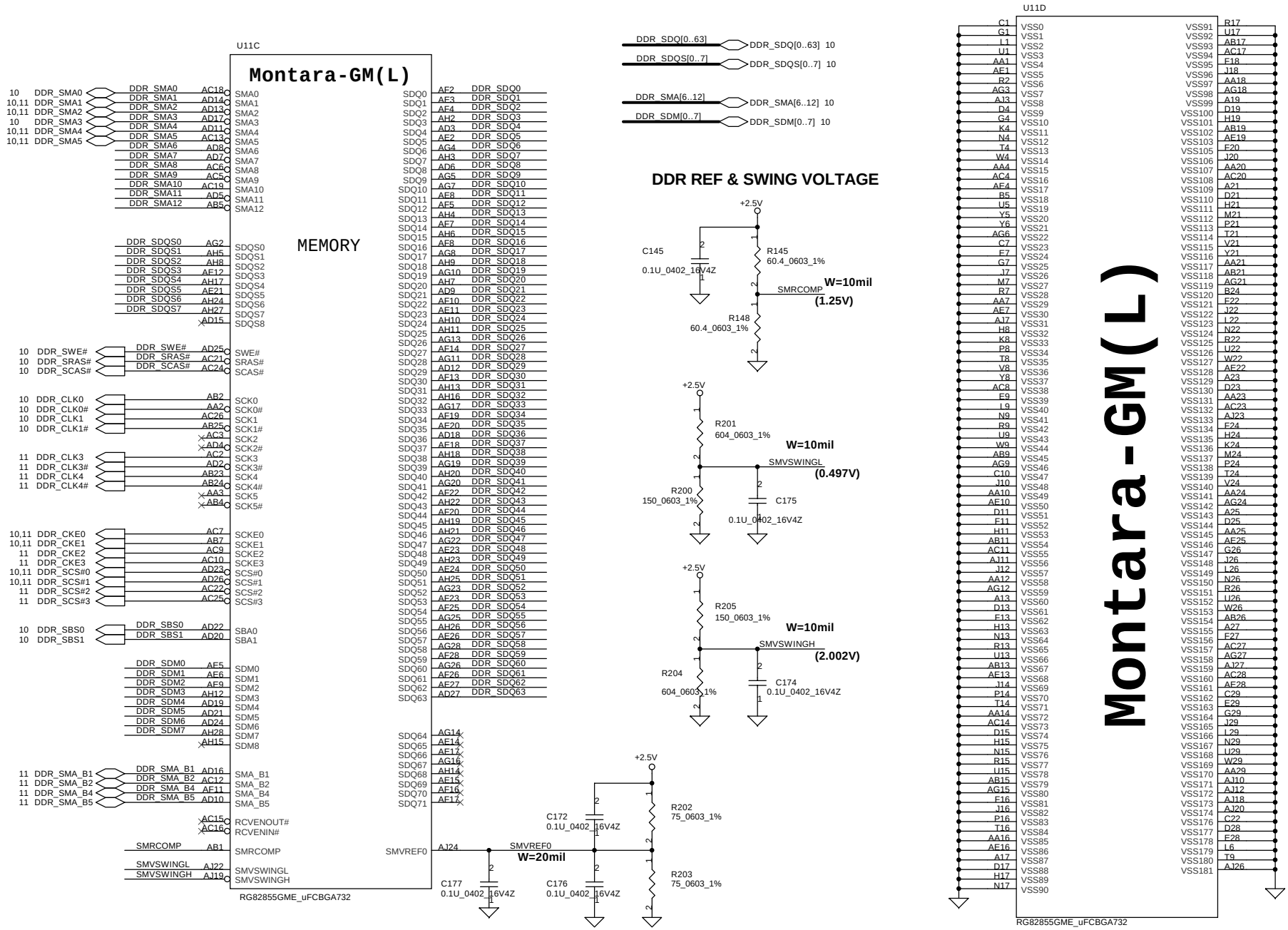

THIS SHEET OF ENGINEERING DRAWING IS THE PROPRIETARY PROPERTY OF COMPAL ELECTRONICS, INC. AND CONTAINS CONFIDENTIAL AND TRADE SECRET INFORMATION. THIS SHEET MAY NOT BE TRANSFERED FROM THE CUSTODY OF THE COMPETENT DIVISION OF R&D DEPARTMENT EXCEPT AS AUTHORIZED BY COMPAL ELECTRONICS, INC. NEITHER THIS SHEET NOR THE INFORMATION IT CONTAINS MAY BE USED BY OR DISCLOSED TO ANY THIRD PARTY WITHOUT PRIOR WRITTEN CONSENT OF COMPAL ELECTRONICS, INC.

Compal Electronics, Inc.	
Title	SCHEMATIC M/B LA-2242
Size	Document Number 401289
Rev	2A
Date:	星期一, 四月 19, 2004
Sheet	8 of 101

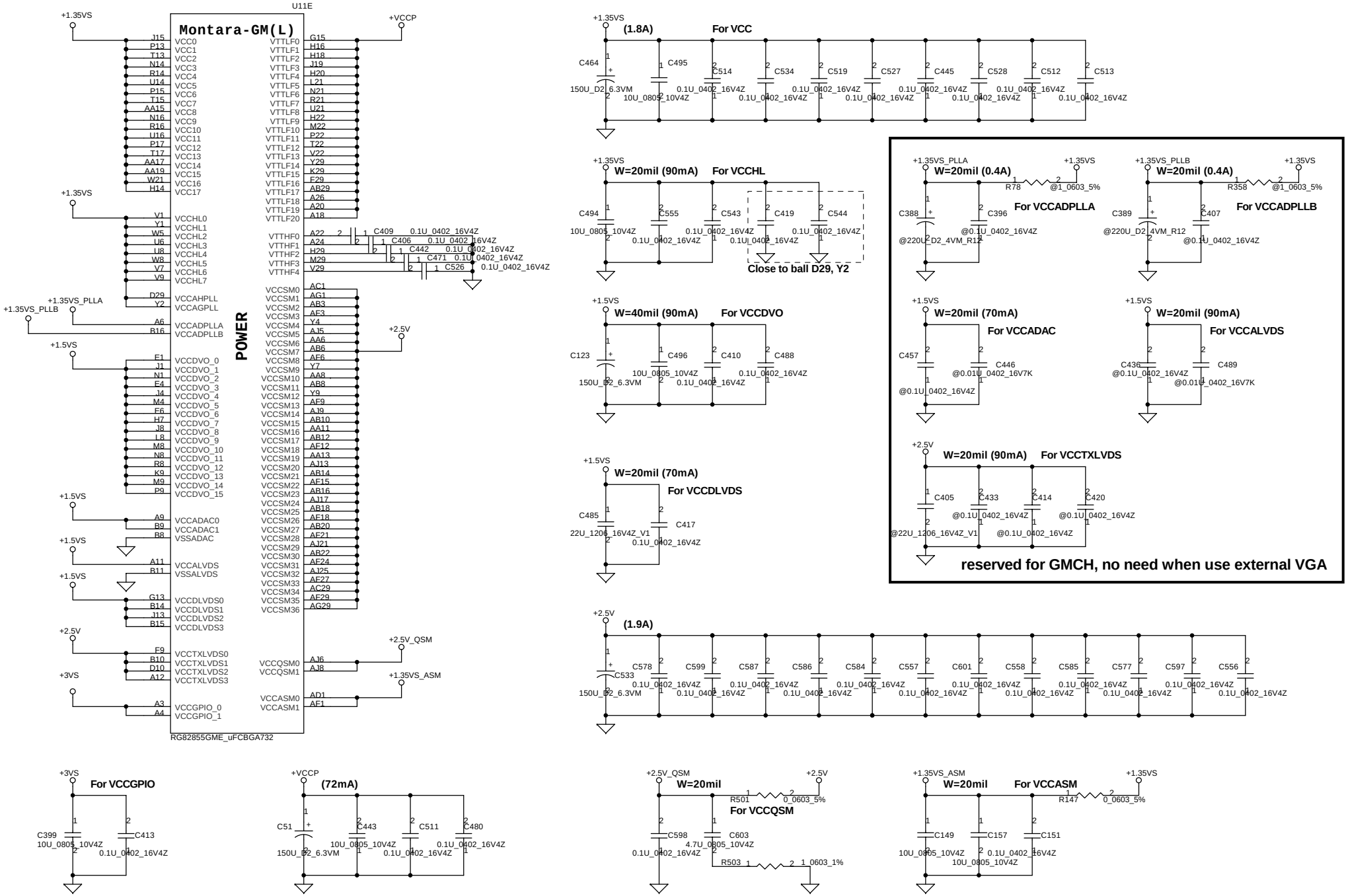

THIS SHEET OF ENGINEERING DRAWING IS THE PROPRIETARY PROPERTY OF COMPAL ELECTRONICS, INC. AND CONTAINS CONFIDENTIAL AND TRADE SECRET INFORMATION. THIS SHEET MAY NOT BE TRANSFERED FROM THE CUSTODY OF THE COMPETENT DIVISION OF R&D DEPARTMENT EXCEPT AS AUTHORIZED BY COMPAL ELECTRONICS, INC. NEITHER THIS SHEET NOR THE INFORMATION IT CONTAINS MAY BE USED BY OR DISCLOSED TO ANY THIRD PARTY WITHOUT PRIOR WRITTEN CONSENT OF COMPAL ELECTRONICS, INC.

Compal Electronics, Inc.	
Title	SCHEMATIC M/B LA-2242
Size	Document Number: 401289 — Rev 2A
Date: 星期一, 四月 19, 2004	Sheet 9 of 101

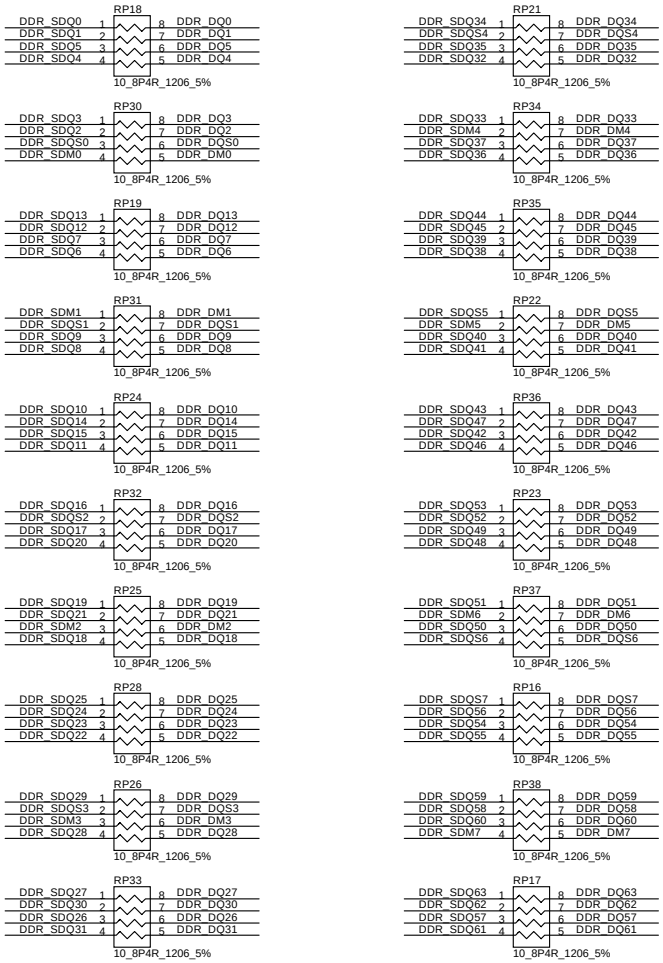

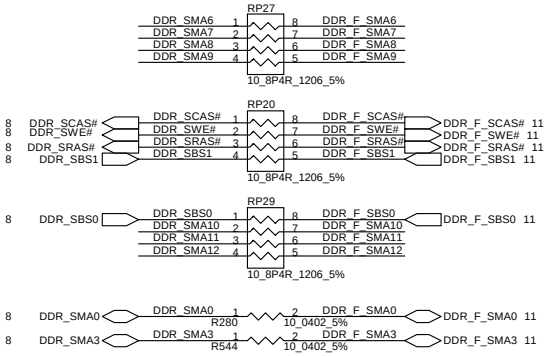

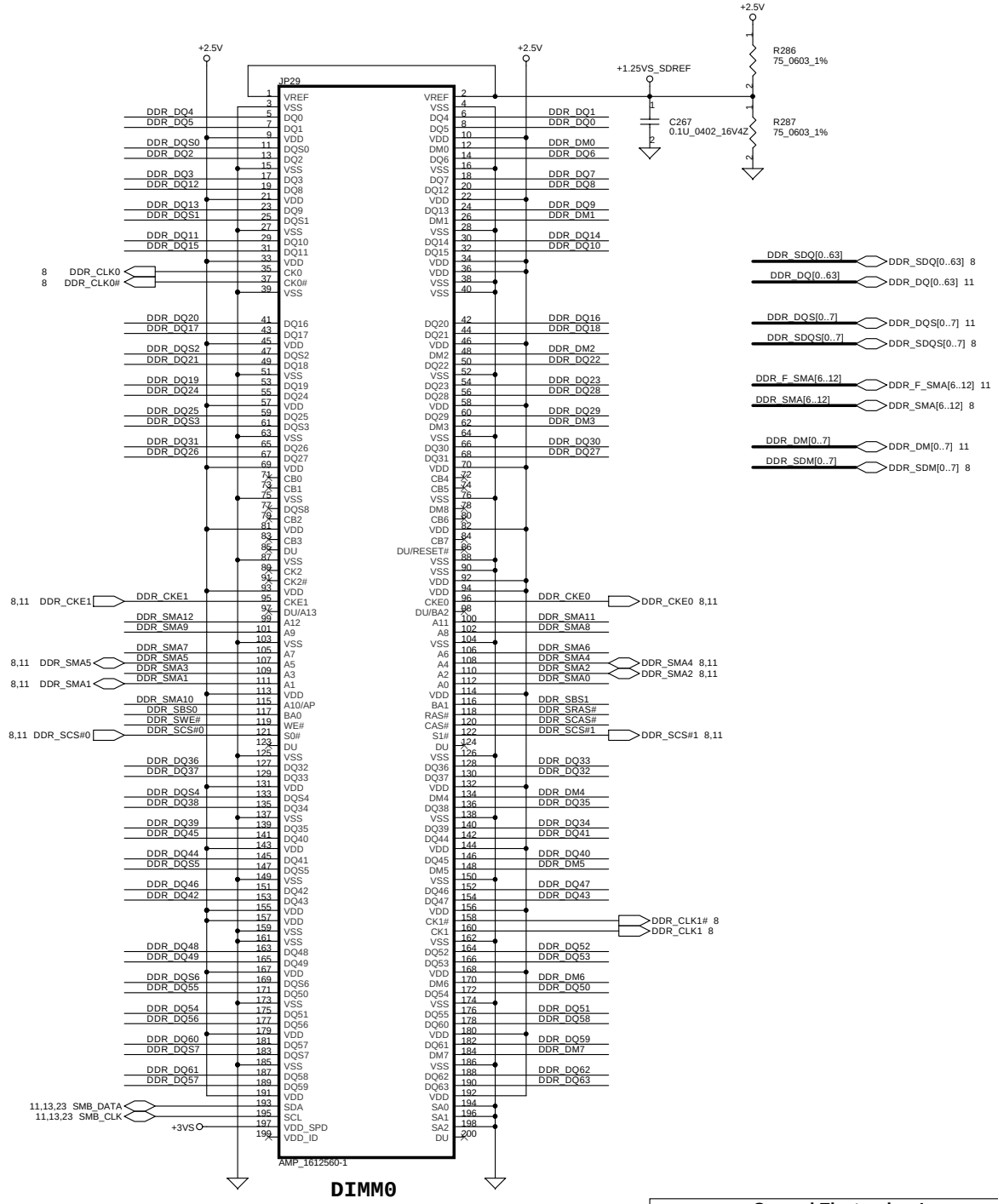

THIS SHEET OF ENGINEERING DRAWING IS THE PROPRIETARY PROPERTY OF COMPAL ELECTRONICS, INC. AND CONTAINS CONFIDENTIAL AND TRADE SECRET INFORMATION. THIS SHEET MAY NOT BE TRANSFERED FROM THE CUSTODY OF THE COMPETENT DIVISION OF R&D DEPARTMENT EXCEPT AS AUTHORIZED BY COMPAL ELECTRONICS, INC. NEITHER THIS SHEET NOR THE INFORMATION IT CONTAINS MAY BE USED BY OR DISCLOSED TO ANY THIRD PARTY WITHOUT PRIOR WRITTEN CONSENT OF COMPAL ELECTRONICS, INC.

Compal Electronics, Inc.

Title: SCHEMATIC M/B LA-2242

Size | Document Number: 401289 | Rev: 2A

Date: 星期一, 四月 19, 2004 | Sheet 10 of 101

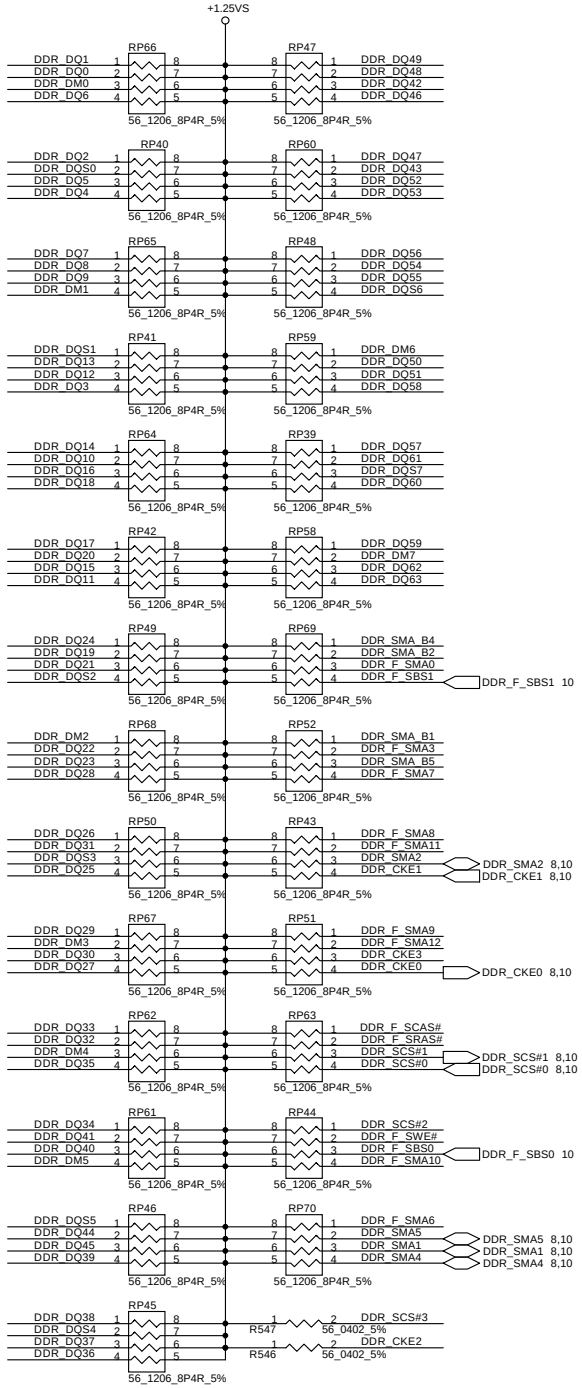

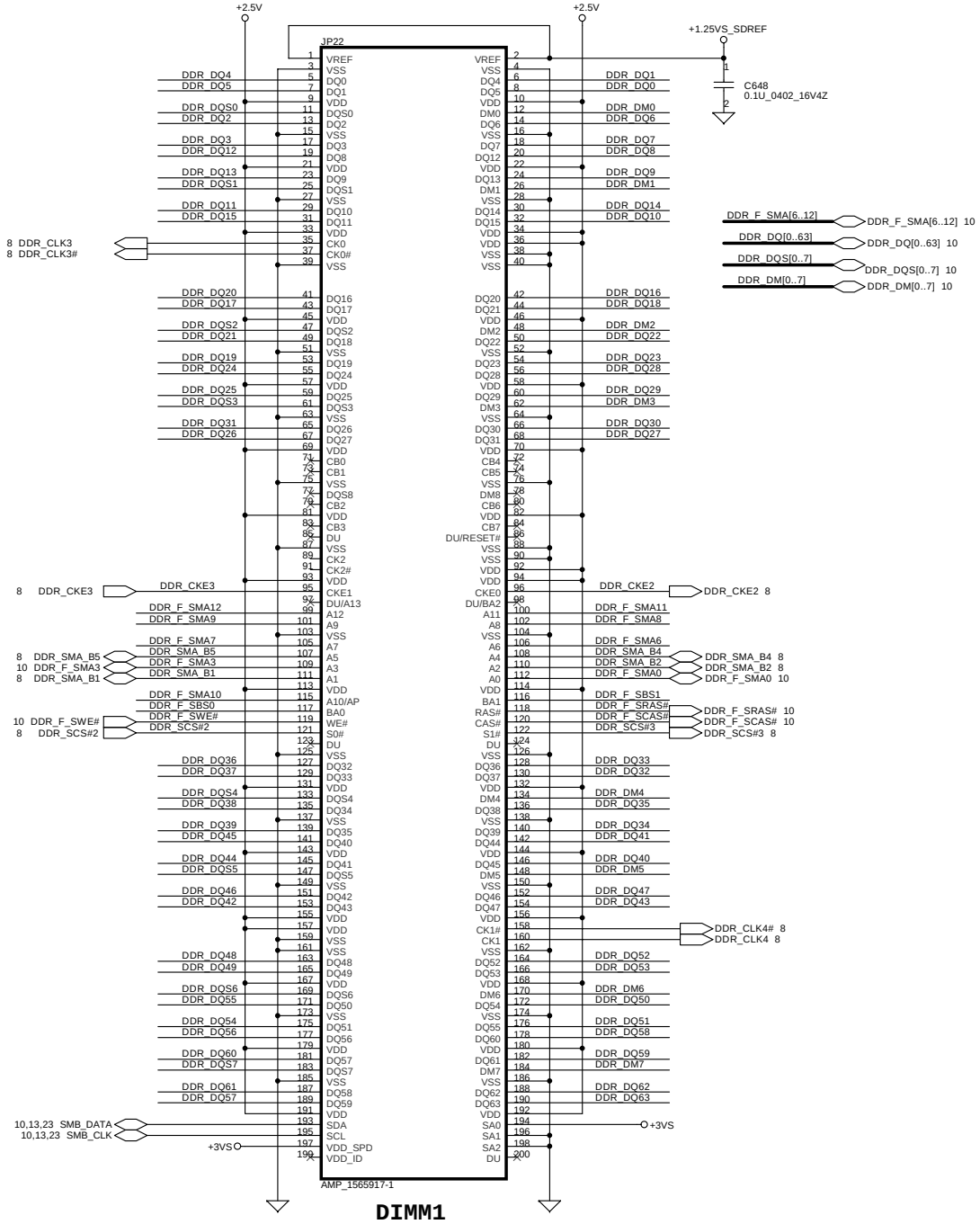

THIS SHEET OF ENGINEERING DRAWING IS THE PROPRIETARY PROPERTY OF COMPAL ELECTRONICS, INC. AND CONTAINS CONFIDENTIAL AND TRADE SECRET INFORMATION. THIS SHEET MAY NOT BE TRANSFERED FROM THE CUSTODY OF THE COMPETENT DIVISION OF R&D DEPARTMENT EXCEPT AS AUTHORIZED BY COMPAL ELECTRONICS, INC. NEITHER THIS SHEET NOR THE INFORMATION IT CONTAINS MAY BE USED BY OR DISCLOSED TO ANY THIRD PARTY WITHOUT PRIOR WRITTEN CONSENT OF COMPAL ELECTRONICS, INC.

Compal Electronics, Inc.

Title: SCHEMATIC M/B LA-2242

Size | Document Number: 401289 | Rev 2A

Date: 星期一, 四月 19, 2004 | Sheet 11 of 101

Layout note :

Distribute as close as possible to DDR-SODIMM.

Unpoped for EMI request

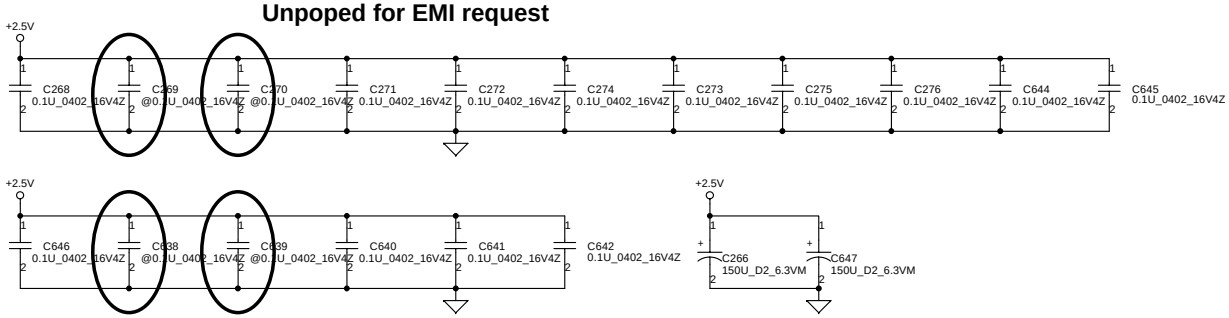

Layout note :

Place one cap close to every 2 pull up resistors termination to +1.25V

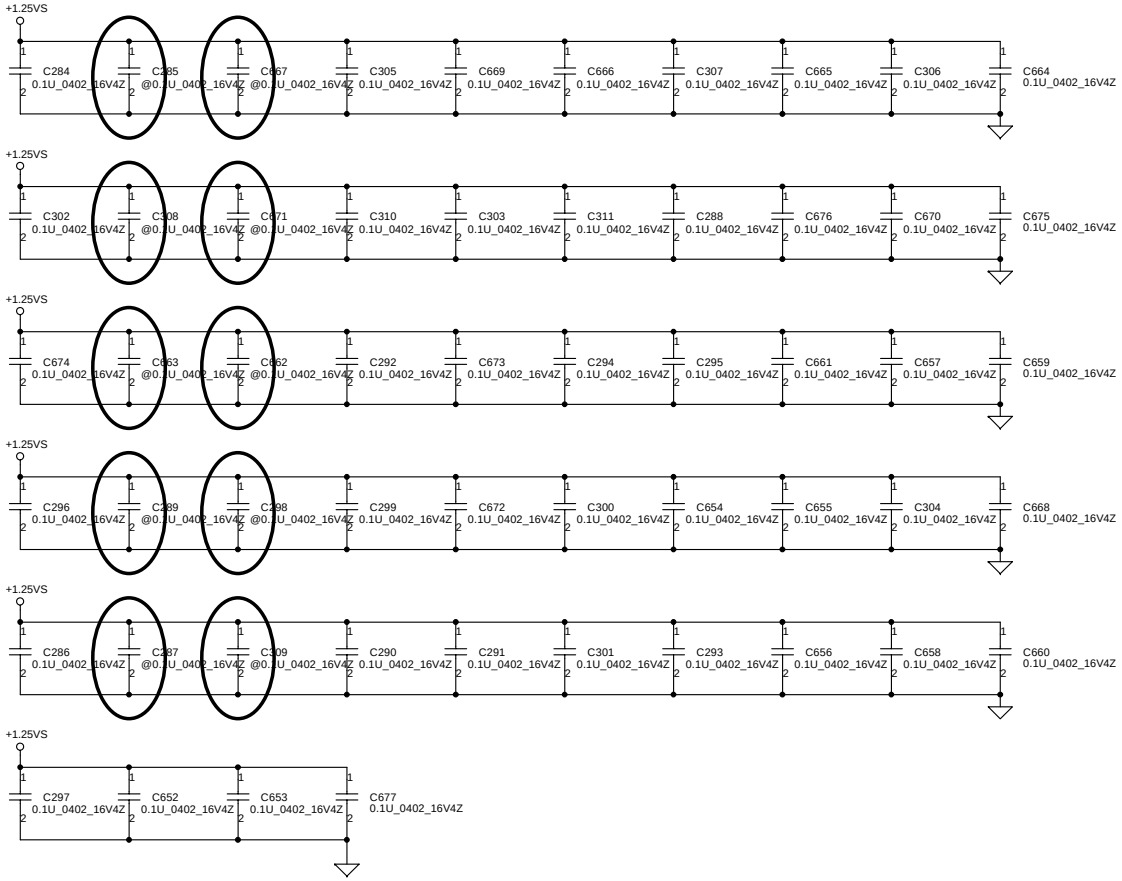

THIS SHEET OF ENGINEERING DRAWING IS THE PROPRIETARY PROPERTY OF COMPAL ELECTRONICS, INC. AND CONTAINS CONFIDENTIAL AND TRADE SECRET INFORMATION. THIS SHEET MAY NOT BE TRANSFERED FROM THE CUSTODY OF THE COMPETENT DIVISION OF R&D DEPARTMENT EXCEPT AS AUTHORIZED BY COMPAL ELECTRONICS, INC. NEITHER THIS SHEET NOR THE INFORMATION IT CONTAINS MAY BE USED BY OR DISCLOSED TO ANY THIRD PARTY WITHOUT PRIOR WRITTEN CONSENT OF COMPAL ELECTRONICS, INC.

Compal Electronics, Inc.	
Title	SCHEMATIC M/B LA-2242
Size	Document Number 401289
Rev	2A
Date:	星期一, 四月 19, 2004
Sheet	12 of 101

Clock Generator

SEL2	SEL1	SEL0	CPUCLKC[0..2]	CPUCLKT[0..2]
0	0	0	166.67	166.67
0	**0**	**1**	**100.00**	**100.00**
0	1	0	200.00	200.00
0	1	1	133.33	133.33

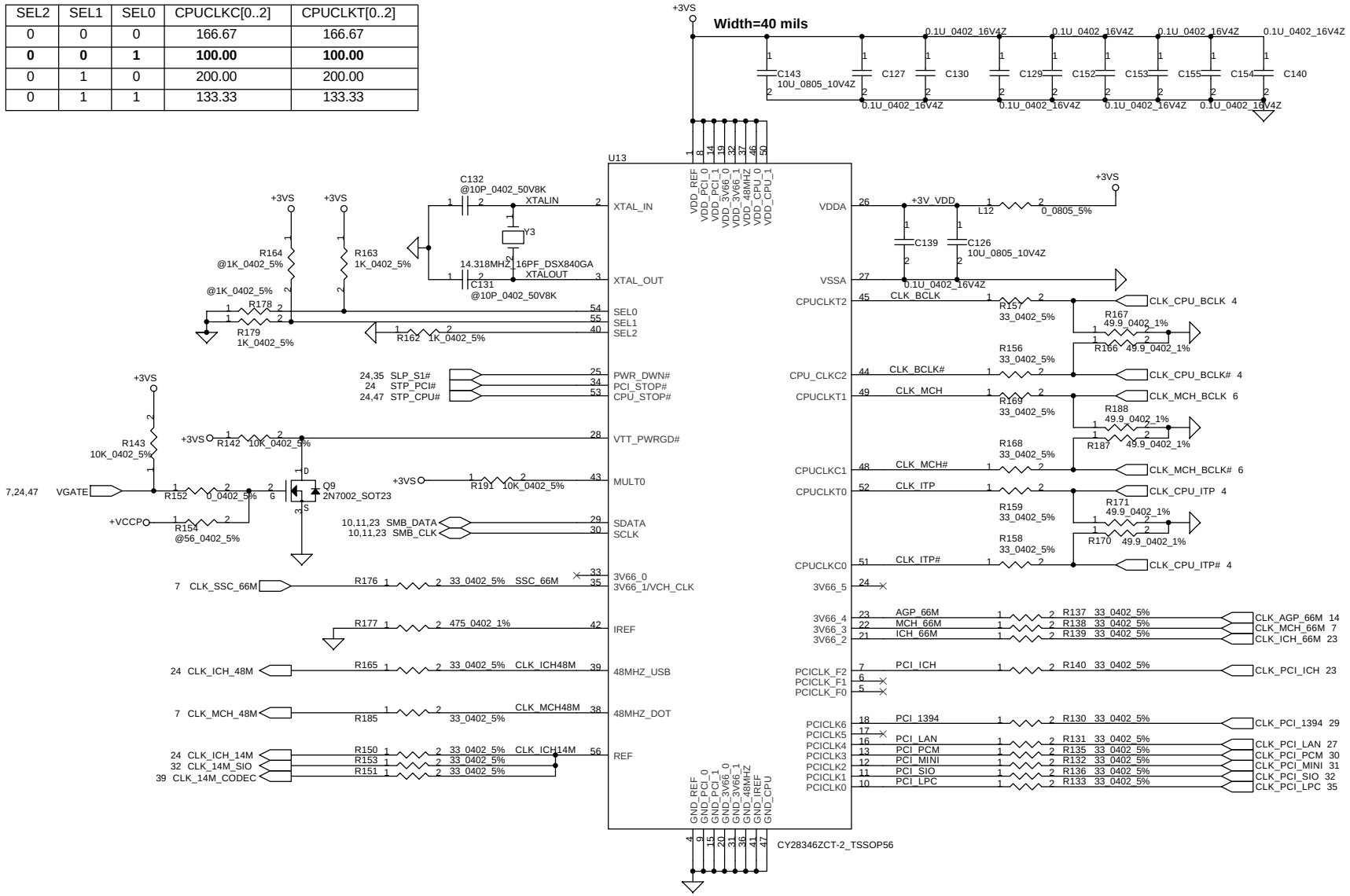

THIS SHEET OF ENGINEERING DRAWING IS THE PROPRIETARY PROPERTY OF COMPAL ELECTRONICS, INC. AND CONTAINS CONFIDENTIAL AND TRADE SECRET INFORMATION. THIS SHEET MAY NOT BE TRANSFERED FROM THE CUSTODY OF THE COMPETENT DIVISION OF R&D DEPARTMENT EXCEPT AS AUTHORIZED BY COMPAL ELECTRONICS, INC. NEITHER THIS SHEET NOR THE INFORMATION IT CONTAINS MAY BE USED BY OR DISCLOSED TO ANY THIRD PARTY WITHOUT PRIOR WRITTEN CONSENT OF COMPAL ELECTRONICS, INC.

Compal Electronics, Inc.

Title: SCHEMATIC M/B LA-2242

Size | Document Number: 401289 | Rev: 2A

Date: 星期一, 四月 19, 2004 | Sheet 13 of 101

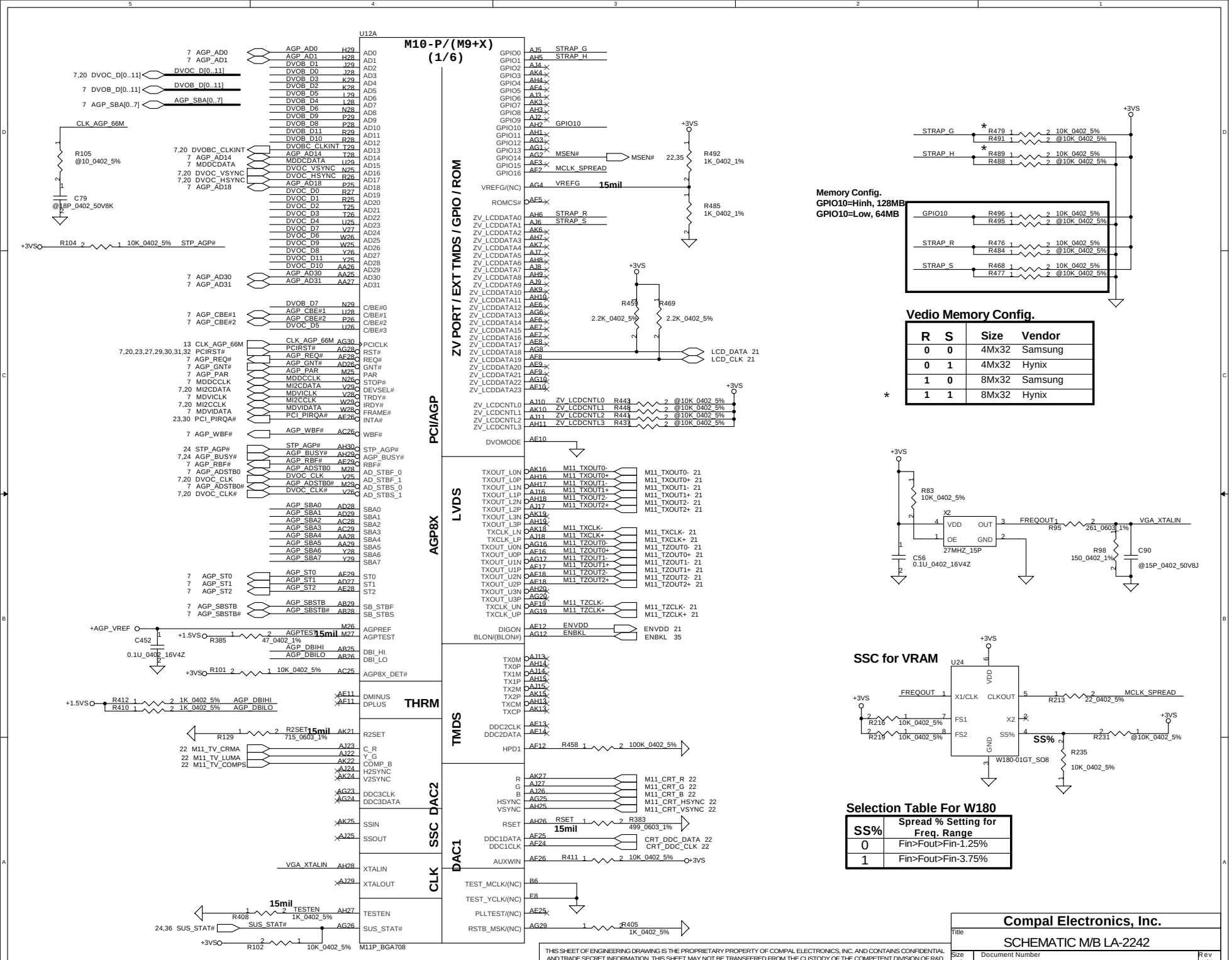

Compal Electronics, Inc.

Title: SCHEMATIC M/B LA-2242

Size: Custom | Document Number: 401289 | Rev: 2A

Date: 星期一, 四 ?19, 2004 | Sheet 14 of 101

THIS SHEET OF ENGINEERING DRAWING IS THE PROPRIETARY PROPERTY OF COMPAL ELECTRONICS, INC. AND CONTAINS CONFIDENTIAL AND TRADE SECRET INFORMATION. THIS SHEET MAY NOT BE TRANSFERED FROM THE CUSTODY OF THE COMPETENT DIVISION OF R&D DEPARTMENT EXCEPT AS AUTHORIZED BY COMPAL ELECTRONICS, INC. NEITHER THIS SHEET NOR THE INFORMATION IT CONTAINS MAY BE USED BY OR DISCLOSED TO ANY THIRD PARTY WITHOUT PRIOR WRITTEN CONSENT OF COMPAL ELECTRONICS, INC.

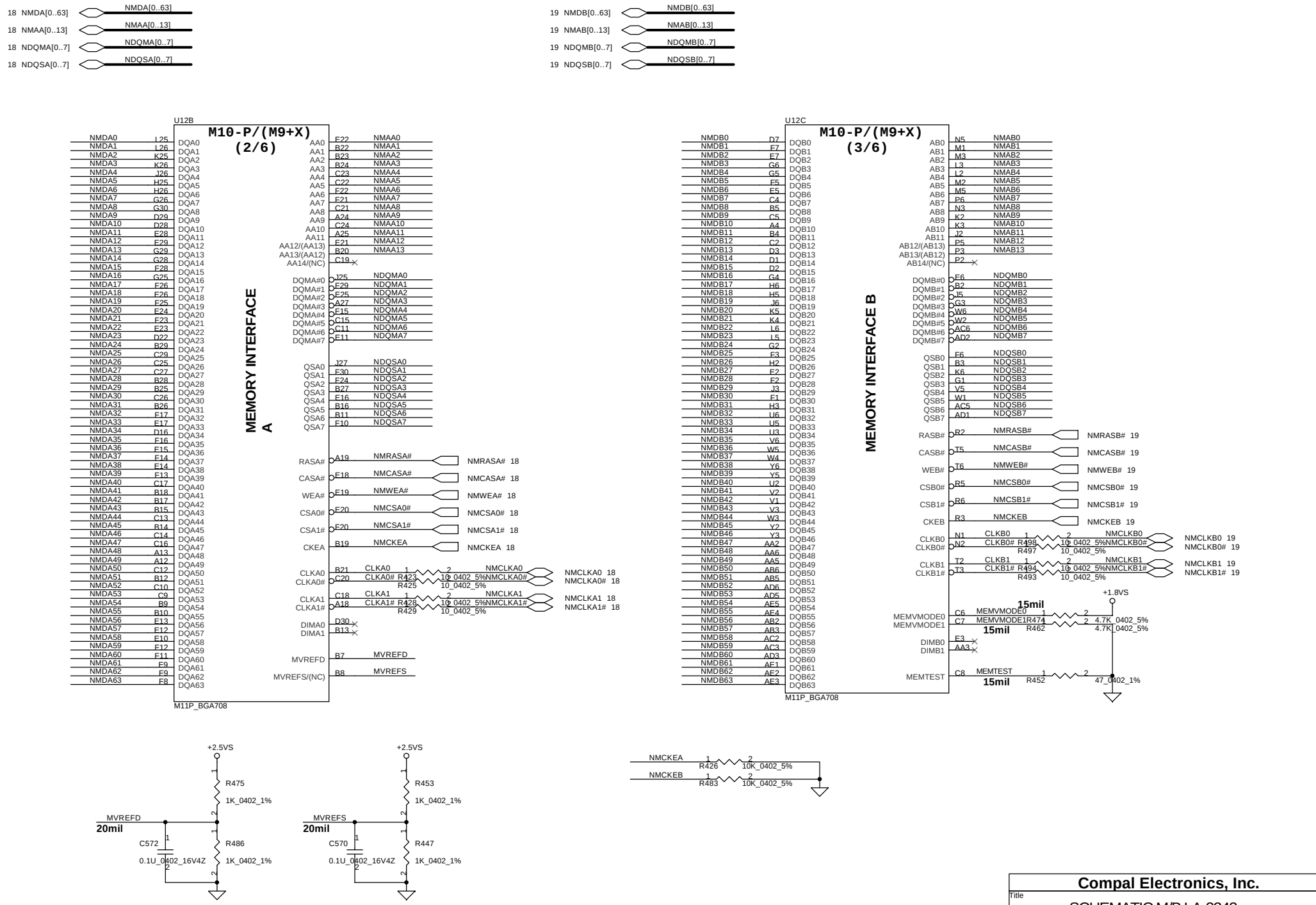

THIS SHEET OF ENGINEERING DRAWING IS THE PROPRIETARY PROPERTY OF COMPAL ELECTRONICS, INC. AND CONTAINS CONFIDENTIAL AND TRADE SECRET INFORMATION. THIS SHEET MAY NOT BE TRANSFERED FROM THE CUSTODY OF THE COMPETENT DIVISION OF R&D DEPARTMENT EXCEPT AS AUTHORIZED BY COMPAL ELECTRONICS, INC. NEITHER THIS SHEET NOR THE INFORMATION IT CONTAINS MAY BE USED BY OR DISCLOSED TO ANY THIRD PARTY WITHOUT PRIOR WRITTEN CONSENT OF COMPAL ELECTRONICS, INC.

Compal Electronics, Inc.

Title: SCHEMATIC M/B LA-2242

Size: B | Document Number: 401289 | Rev: 2A

Date: 星期一, 四月 19, 2004 | Sheet 15 of 101

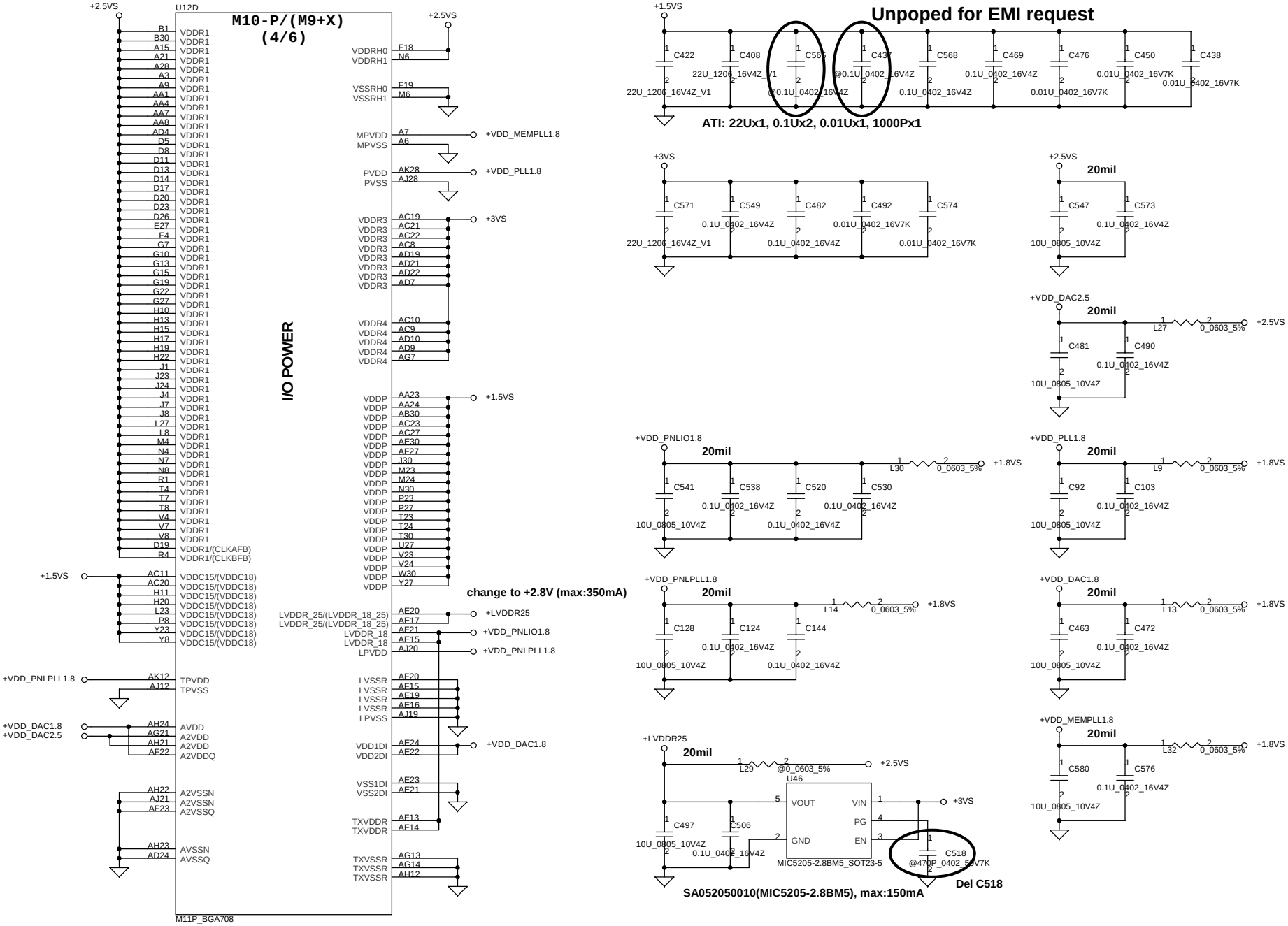

THIS SHEET OF ENGINEERING DRAWING IS THE PROPRIETARY PROPERTY OF COMPAL ELECTRONICS, INC. AND CONTAINS CONFIDENTIAL AND TRADE SECRET INFORMATION. THIS SHEET MAY NOT BE TRANSFERED FROM THE CUSTODY OF THE COMPETENT DIVISION OF R&D DEPARTMENT EXCEPT AS AUTHORIZED BY COMPAL ELECTRONICS, INC. NEITHER THIS SHEET NOR THE INFORMATION IT CONTAINS MAY BE USED BY OR DISCLOSED TO ANY THIRD PARTY WITHOUT PRIOR WRITTEN CONSENT OF COMPAL ELECTRONICS, INC.

Compal Electronics, Inc.

Title	SCHEMATIC M/B LA-2242	
Size B	Document Number 401289	Rev 2A
Date: 星期一, 四月 19, 2004	Sheet 16 of 101	

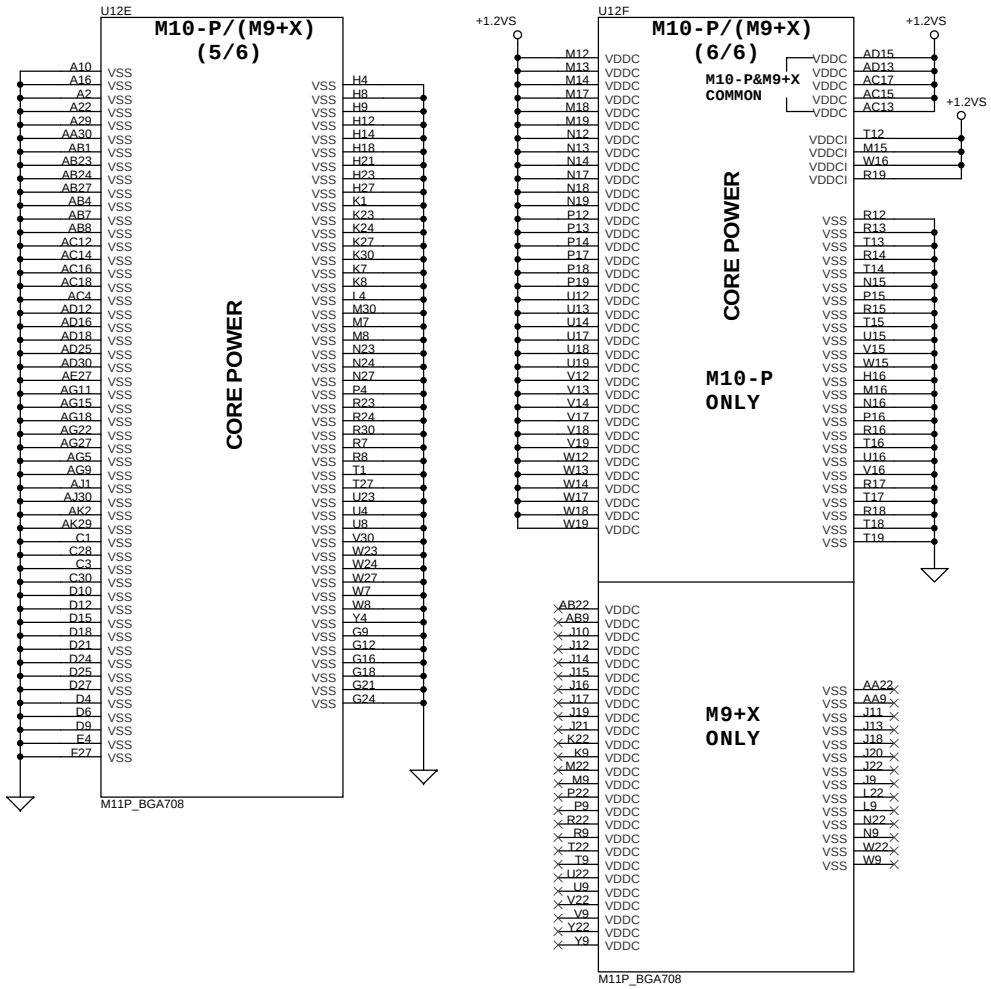

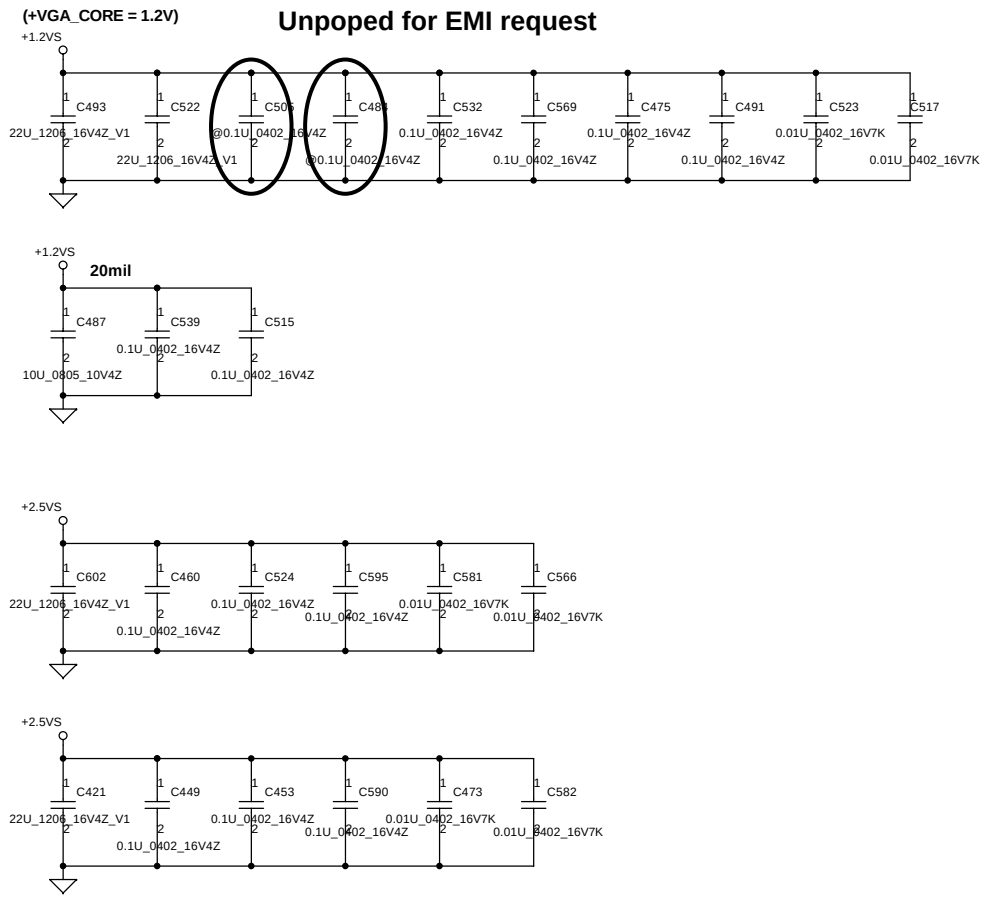

THIS SHEET OF ENGINEERING DRAWING IS THE PROPRIETARY PROPERTY OF COMPAL ELECTRONICS, INC. AND CONTAINS CONFIDENTIAL AND TRADE SECRET INFORMATION. THIS SHEET MAY NOT BE TRANSFERED FROM THE CUSTODY OF THE COMPETENT DIVISION OF R&D DEPARTMENT EXCEPT AS AUTHORIZED BY COMPAL ELECTRONICS, INC. NEITHER THIS SHEET NOR THE INFORMATION IT CONTAINS MAY BE USED BY OR DISCLOSED TO ANY THIRD PARTY WITHOUT PRIOR WRITTEN CONSENT OF COMPAL ELECTRONICS, INC.

Compal Electronics, Inc.		
Title: SCHEMATIC M/B LA-2242		
Size: B	Document Number: 401289	Rev: 2A
Date: 星期一, 四月 19, 2004	Sheet 17 of 101	

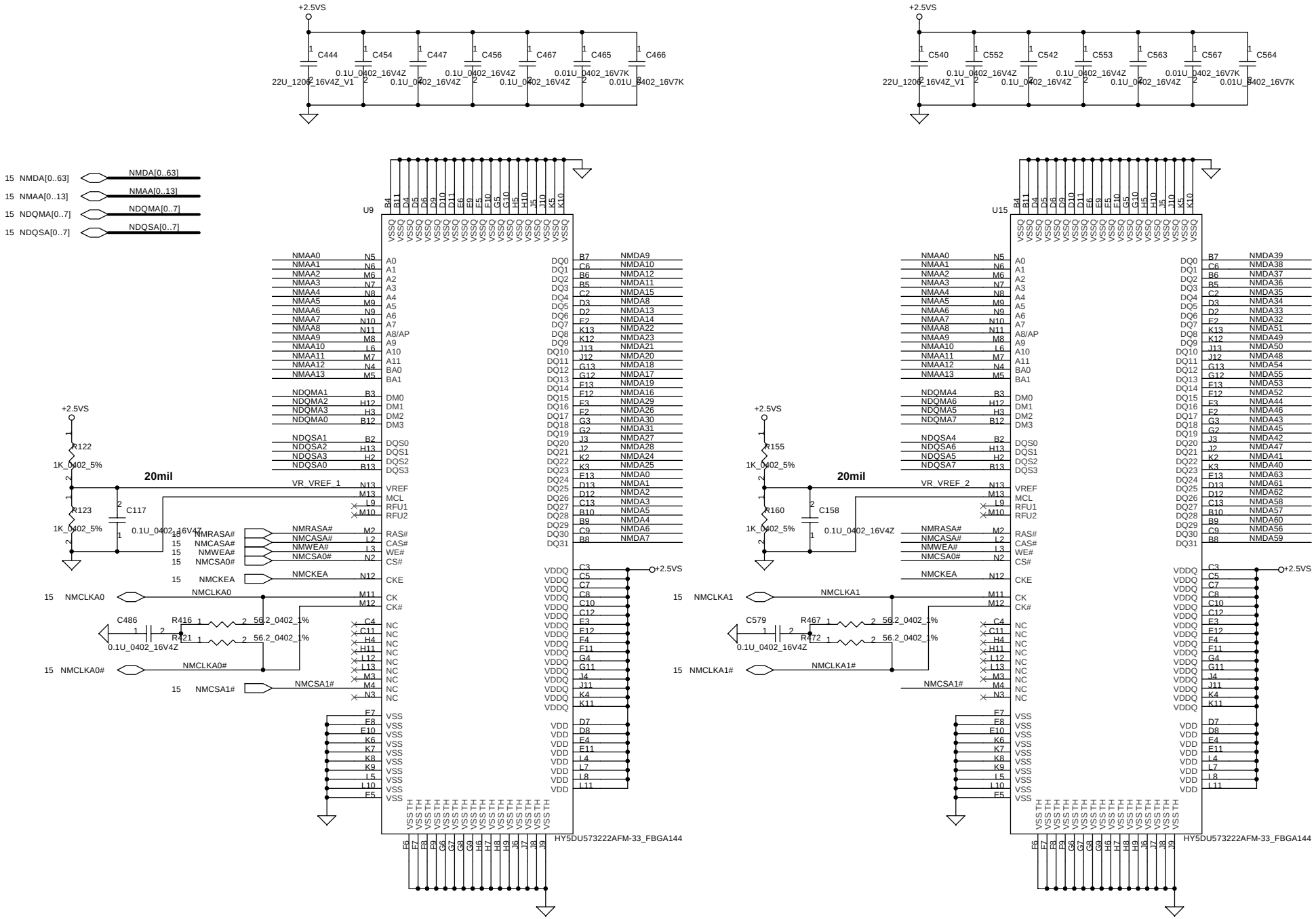

THIS SHEET OF ENGINEERING DRAWING IS THE PROPRIETARY PROPERTY OF COMPAL ELECTRONICS, INC. AND CONTAINS CONFIDENTIAL AND TRADE SECRET INFORMATION. THIS SHEET MAY NOT BE TRANSFERED FROM THE CUSTODY OF THE COMPETENT DIVISION OF R&D DEPARTMENT EXCEPT AS AUTHORIZED BY COMPAL ELECTRONICS, INC. NEITHER THIS SHEET NOR THE INFORMATION IT CONTAINS MAY BE USED BY OR DISCLOSED TO ANY THIRD PARTY WITHOUT PRIOR WRITTEN CONSENT OF COMPAL ELECTRONICS, INC.

Compal Electronics, Inc.

Title	SCHEMATIC M/B LA-2242	
Size B	Document Number 401289	Rev 2A
Date: 星期一, 四月 19, 2004	Sheet 18 of 101	

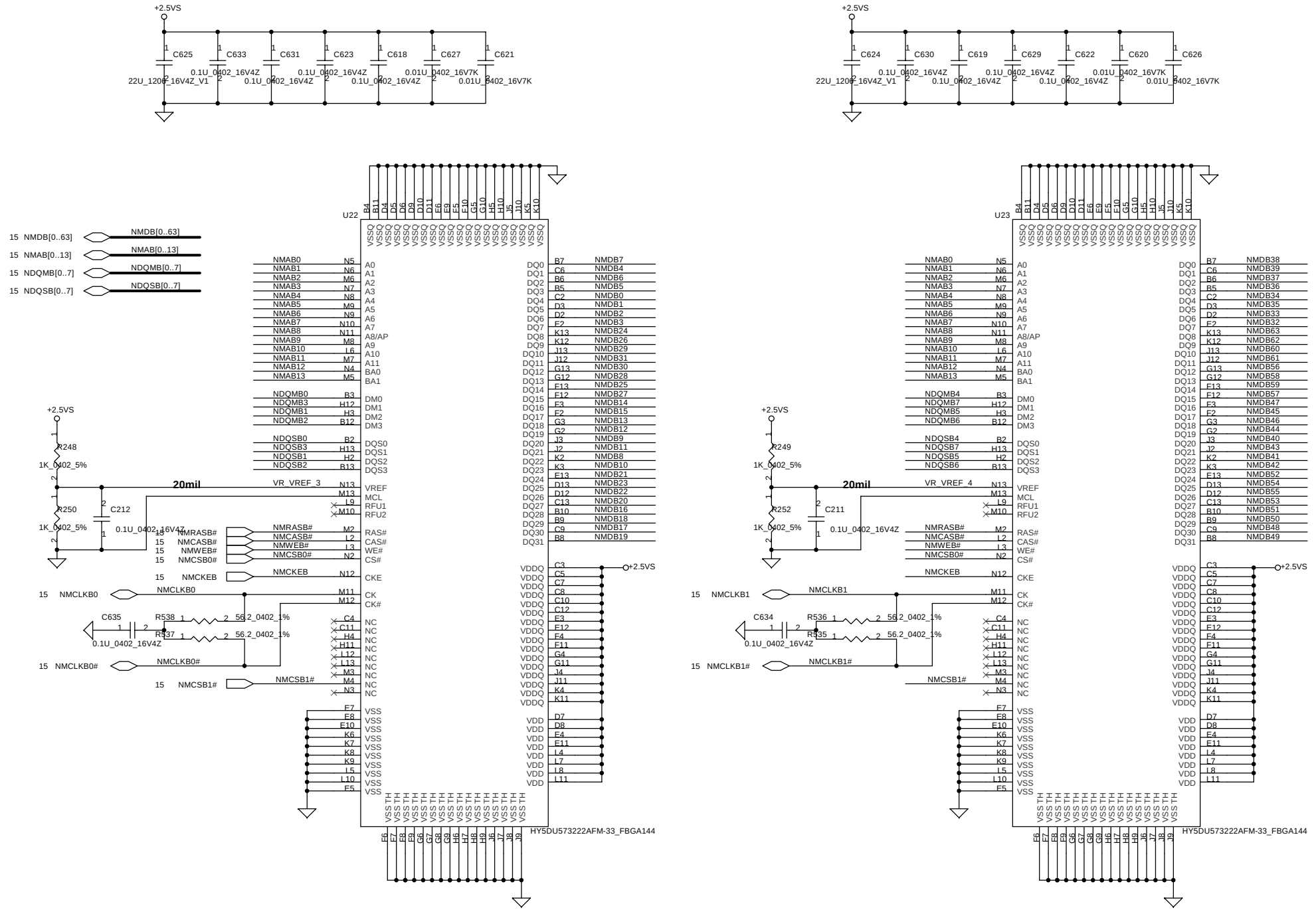

Compal Electronics, Inc.			
Title	SCHEMATIC M/B LA-2242		
Size B	Document Number 401289		Rev 2A
Date: 星期一, 四月 19, 2004	Sheet 19 of 101		

THIS SHEET OF ENGINEERING DRAWING IS THE PROPRIETARY PROPERTY OF COMPAL ELECTRONICS, INC. AND CONTAINS CONFIDENTIAL AND TRADE SECRET INFORMATION. THIS SHEET MAY NOT BE TRANSFERED FROM THE CUSTODY OF THE COMPETENT DIVISION OF R&D DEPARTMENT EXCEPT AS AUTHORIZED BY COMPAL ELECTRONICS, INC. NEITHER THIS SHEET NOR THE INFORMATION IT CONTAINS MAY BE USED BY OR DISCLOSED TO ANY THIRD PARTY WITHOUT PRIOR WRITTEN CONSENT OF COMPAL ELECTRONICS, INC.

TV Encoder

remove this page when use M11P

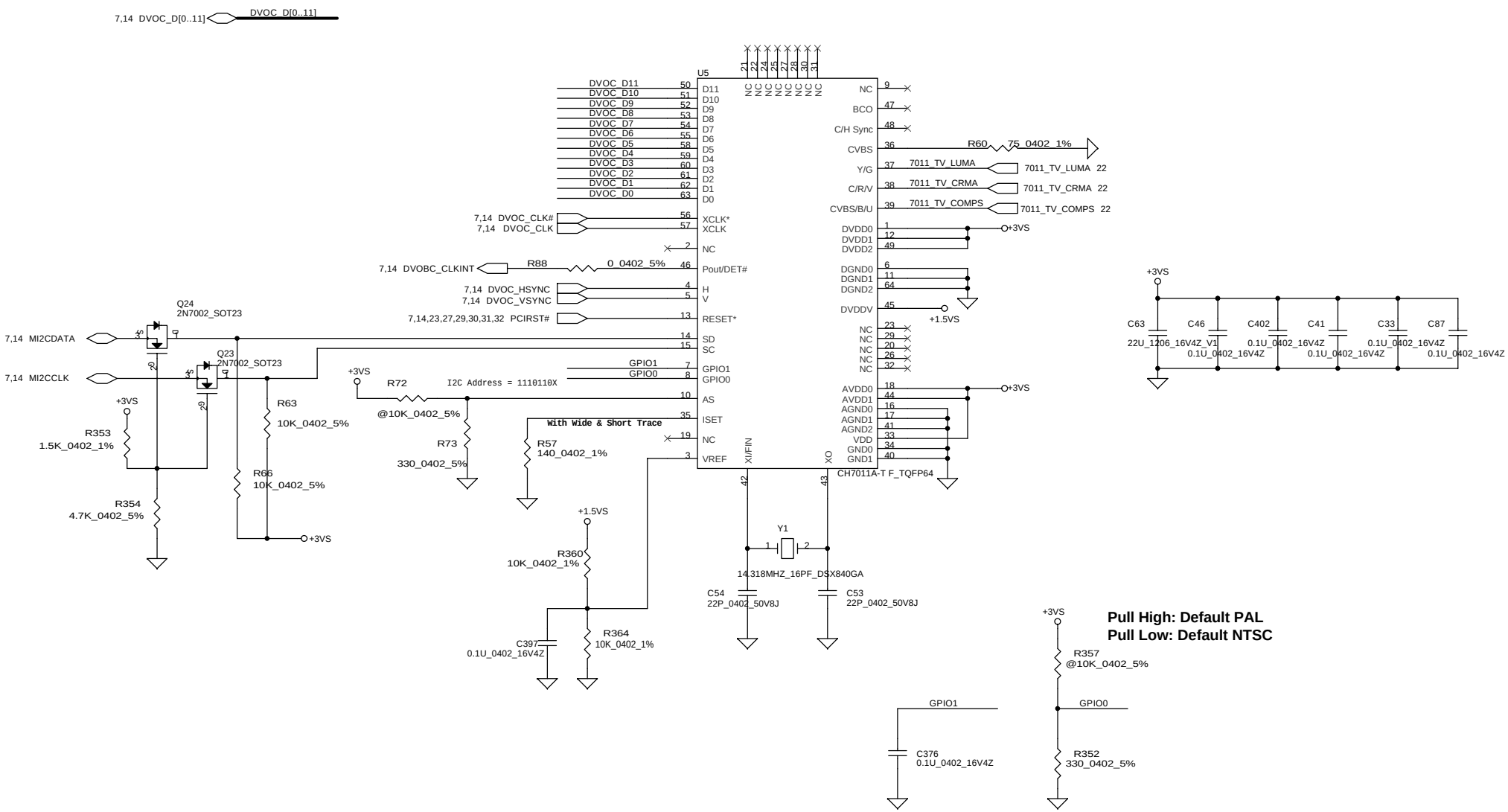

THIS SHEET OF ENGINEERING DRAWING IS THE PROPRIETARY PROPERTY OF COMPAL ELECTRONICS, INC. AND CONTAINS CONFIDENTIAL AND TRADE SECRET INFORMATION. THIS SHEET MAY NOT BE TRANSFERED FROM THE CUSTODY OF THE COMPETENT DIVISION OF R&D DEPARTMENT EXCEPT AS AUTHORIZED BY COMPAL ELECTRONICS, INC. NEITHER THIS SHEET NOR THE INFORMATION IT CONTAINS MAY BE USED BY OR DISCLOSED TO ANY THIRD PARTY WITHOUT PRIOR WRITTEN CONSENT OF COMPAL ELECTRONICS, INC.

Compal Electronics, Inc.		
Title: SCHEMATIC M/B LA-2242		
Size	Document Number: 401289	Rev 2A
Date: 星期一, 四月 19, 2004	Sheet 20 of 101	

LCD POWER CIRCUIT

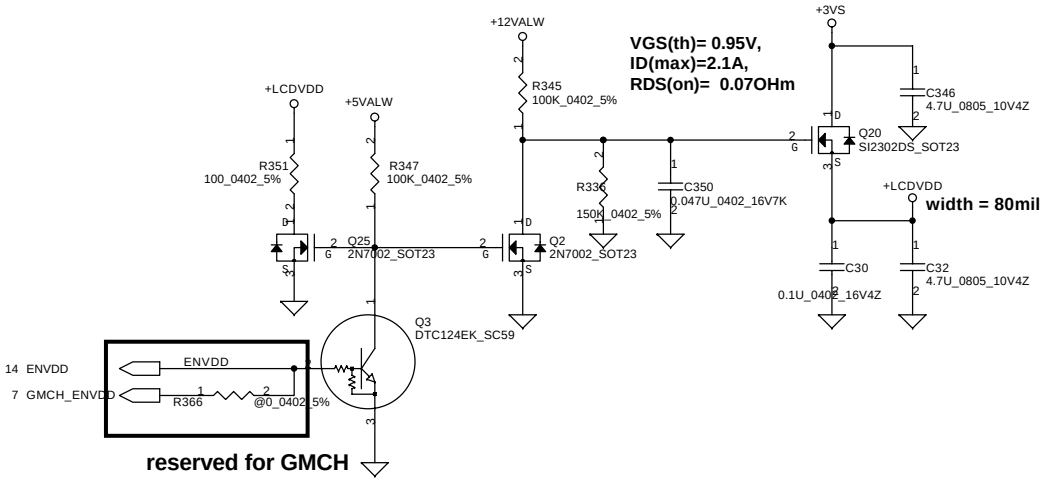

LCD CONN.

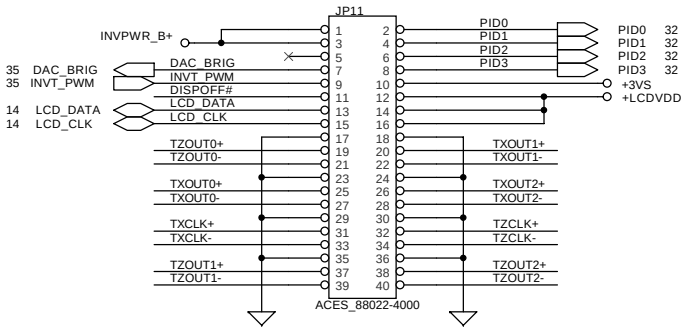

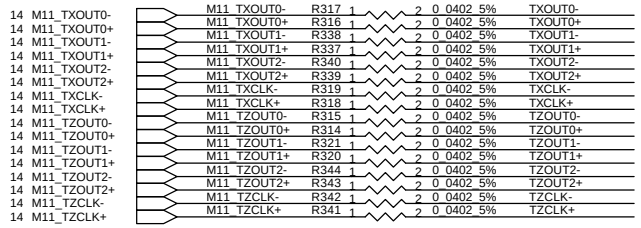

For ATI M11P

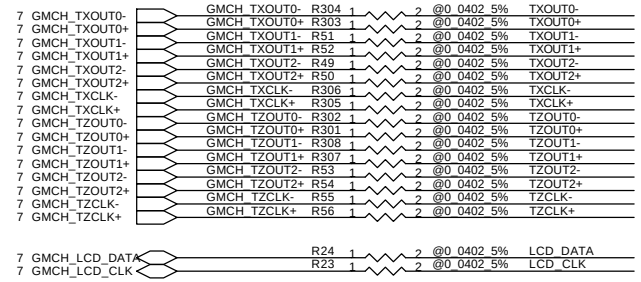

For GMCH

Table 1: Panel ID

PID3	PID2	PID1	PID0	PANEL
0	1	0	0	SANYO TM154WX-22L31 15.4" WXGA 1280X800
0	1	0	1	AU B154EW01 15.4" WXGA 1280X800
0	1	1	0	CPT CLAA154WA01 15.4" WXGA 1280X800
0	1	1	1	SAMSUNG LTN154X1-L02 15.4" WXGA 1280X800
1	0	0	1	SAMSUNG LTN154P1-L02 15.4" WSXGA+ 1680X1050
1	0	1	0	LG LP154W02-A1 15.4" WSXGA+ 1680X1050

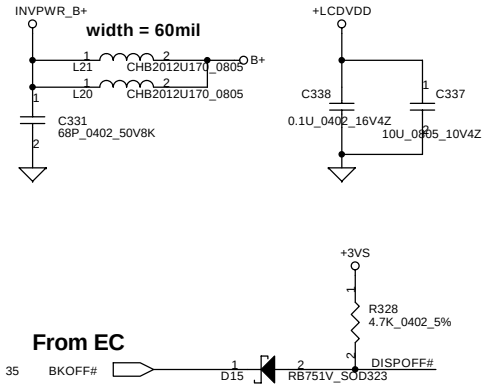

THIS SHEET OF ENGINEERING DRAWING IS THE PROPRIETARY PROPERTY OF COMPAL ELECTRONICS, INC. AND CONTAINS CONFIDENTIAL AND TRADE SECRET INFORMATION. THIS SHEET MAY NOT BE TRANSFERED FROM THE CUSTODY OF THE COMPETENT DIVISION OF R&D DEPARTMENT EXCEPT AS AUTHORIZED BY COMPAL ELECTRONICS, INC. NEITHER THIS SHEET NOR THE INFORMATION IT CONTAINS MAY BE USED BY OR DISCLOSED TO ANY THIRD PARTY WITHOUT PRIOR WRITTEN CONSENT OF COMPAL ELECTRONICS, INC.

Compal Electronics, Inc.

Title: SCHEMATIC M/B LA-2242

Size: B | Document Number: 401289 | Rev: 2A

Date: 星期一, 四月 19, 2004 | Sheet 21 of 101

CRT Connector

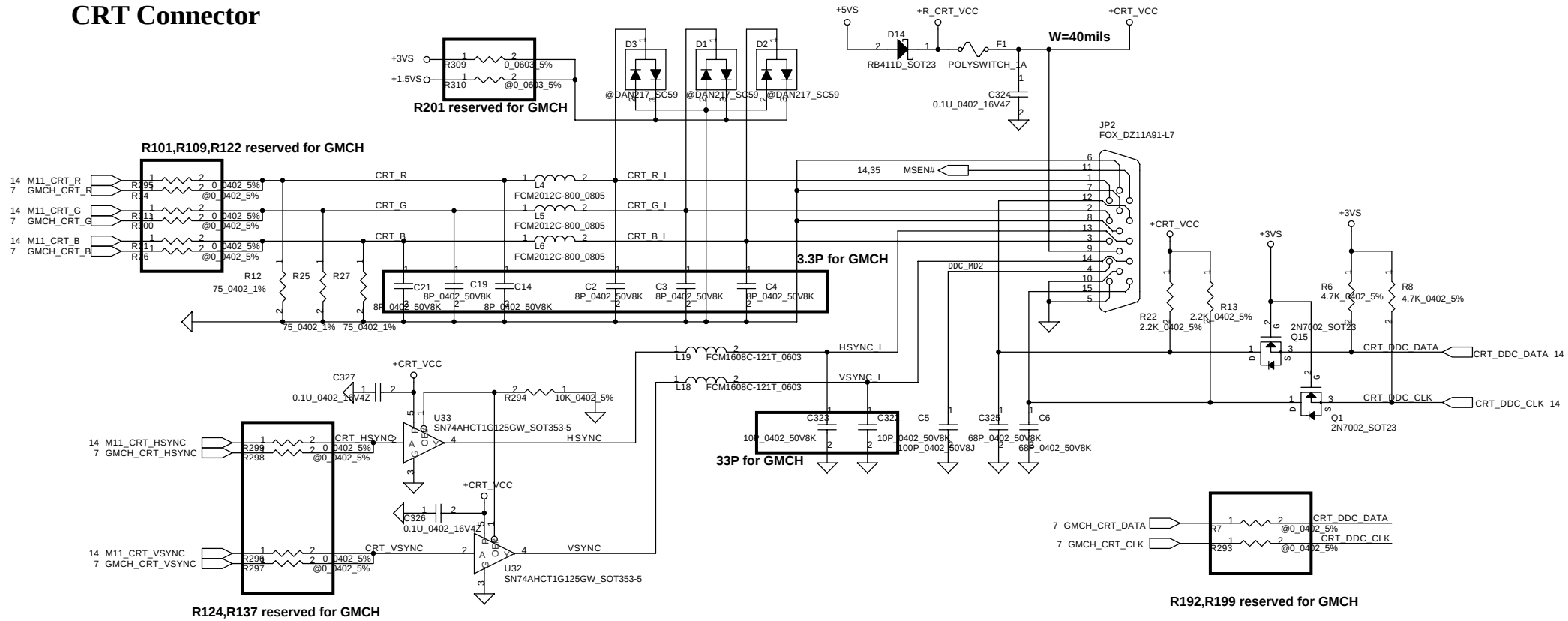

TV-Out Connector

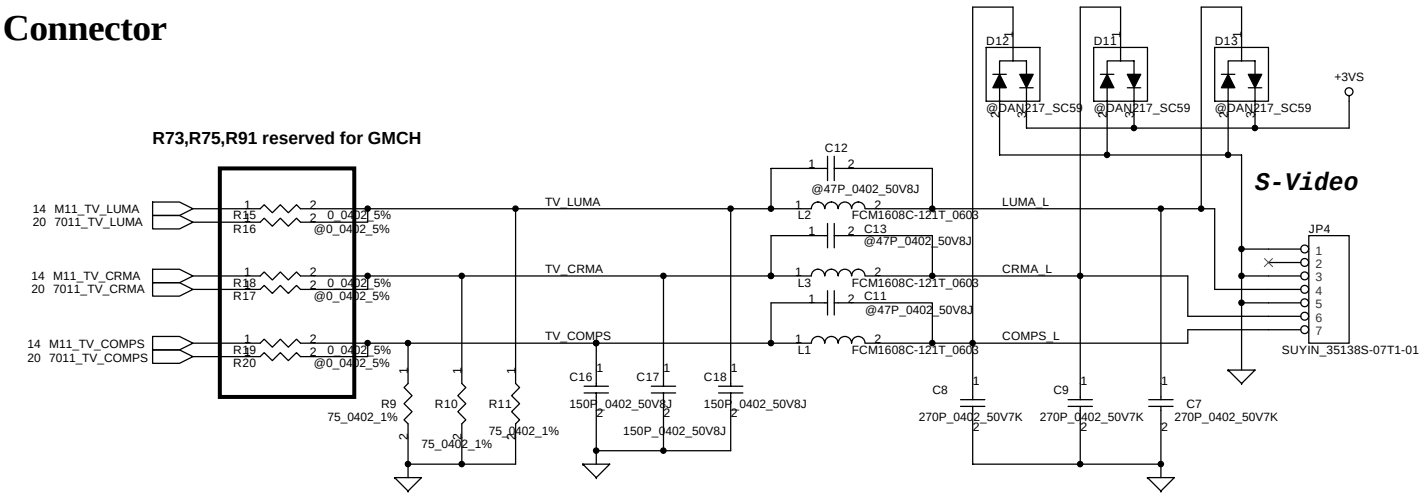

THIS SHEET OF ENGINEERING DRAWING IS THE PROPRIETARY PROPERTY OF COMPAL ELECTRONICS, INC. AND CONTAINS CONFIDENTIAL AND TRADE SECRET INFORMATION. THIS SHEET MAY NOT BE TRANSFERED FROM THE CUSTODY OF THE COMPETENT DIVISION OF R&D DEPARTMENT EXCEPT AS AUTHORIZED BY COMPAL ELECTRONICS, INC. NEITHER THIS SHEET NOR THE INFORMATION IT CONTAINS MAY BE USED BY OR DISCLOSED TO ANY THIRD PARTY WITHOUT PRIOR WRITTEN CONSENT OF COMPAL ELECTRONICS, INC.

Compal Electronics, Inc.	
Title	SCHEMATIC M/B LA-2242
Size	Document Number 401289
Rev	2A
Date:	星期一, 四月 19, 2004
Sheet	22 of 101

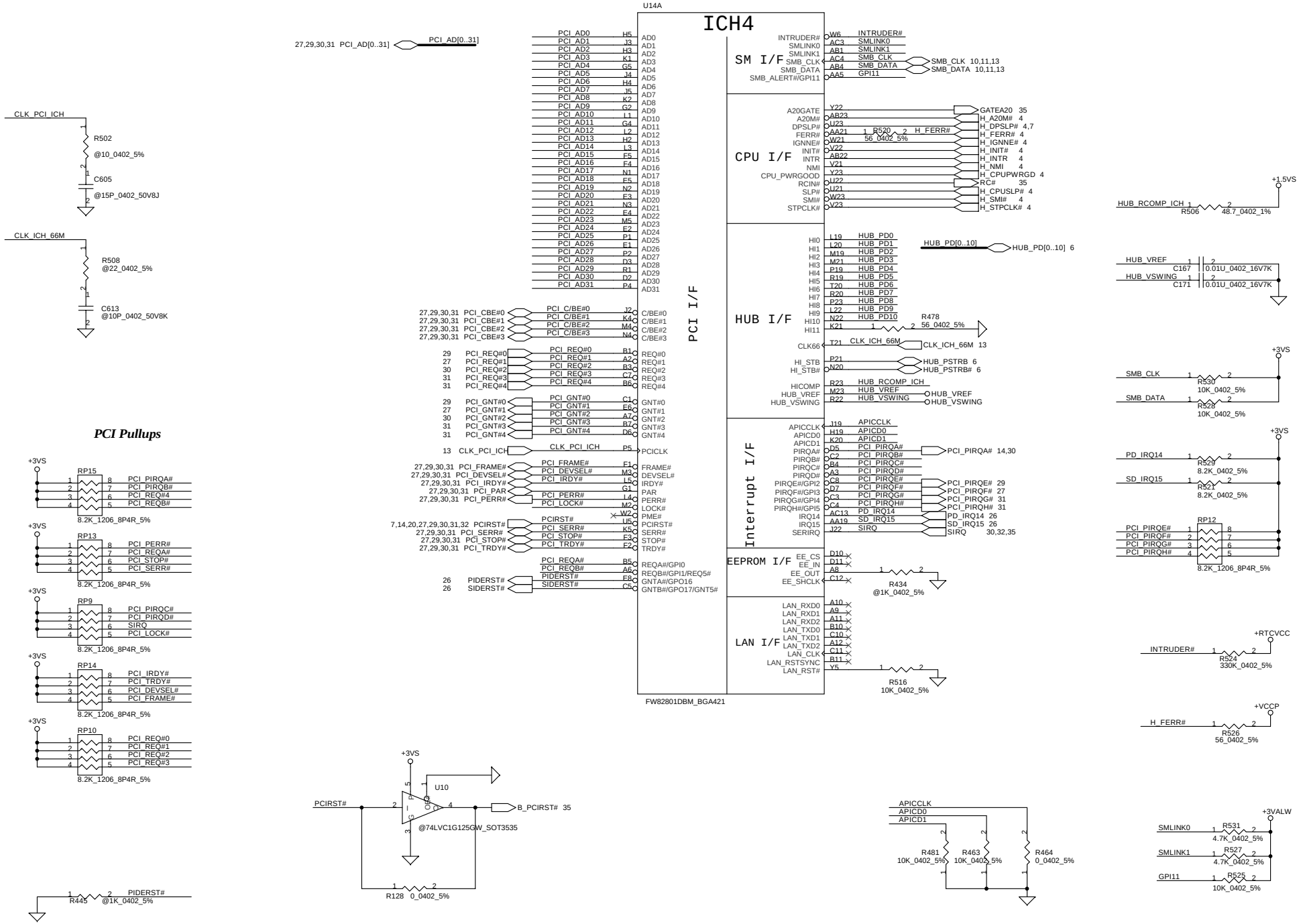

THIS SHEET OF ENGINEERING DRAWING IS THE PROPRIETARY PROPERTY OF COMPAL ELECTRONICS, INC. AND CONTAINS CONFIDENTIAL AND TRADE SECRET INFORMATION. THIS SHEET MAY NOT BE TRANSFERED FROM THE CUSTODY OF THE COMPETENT DIVISION OF R&D DEPARTMENT EXCEPT AS AUTHORIZED BY COMPAL ELECTRONICS, INC. NEITHER THIS SHEET NOR THE INFORMATION IT CONTAINS MAY BE USED BY OR DISCLOSED TO ANY THIRD PARTY WITHOUT PRIOR WRITTEN CONSENT OF COMPAL ELECTRONICS, INC.

Compal Electronics, Inc.

Title: SCHEMATIC M/B LA-2242

Size | Document Number: 401289 | Rev: 2A

Date: 星期一, 四月 19, 2004 | Sheet 23 of 101

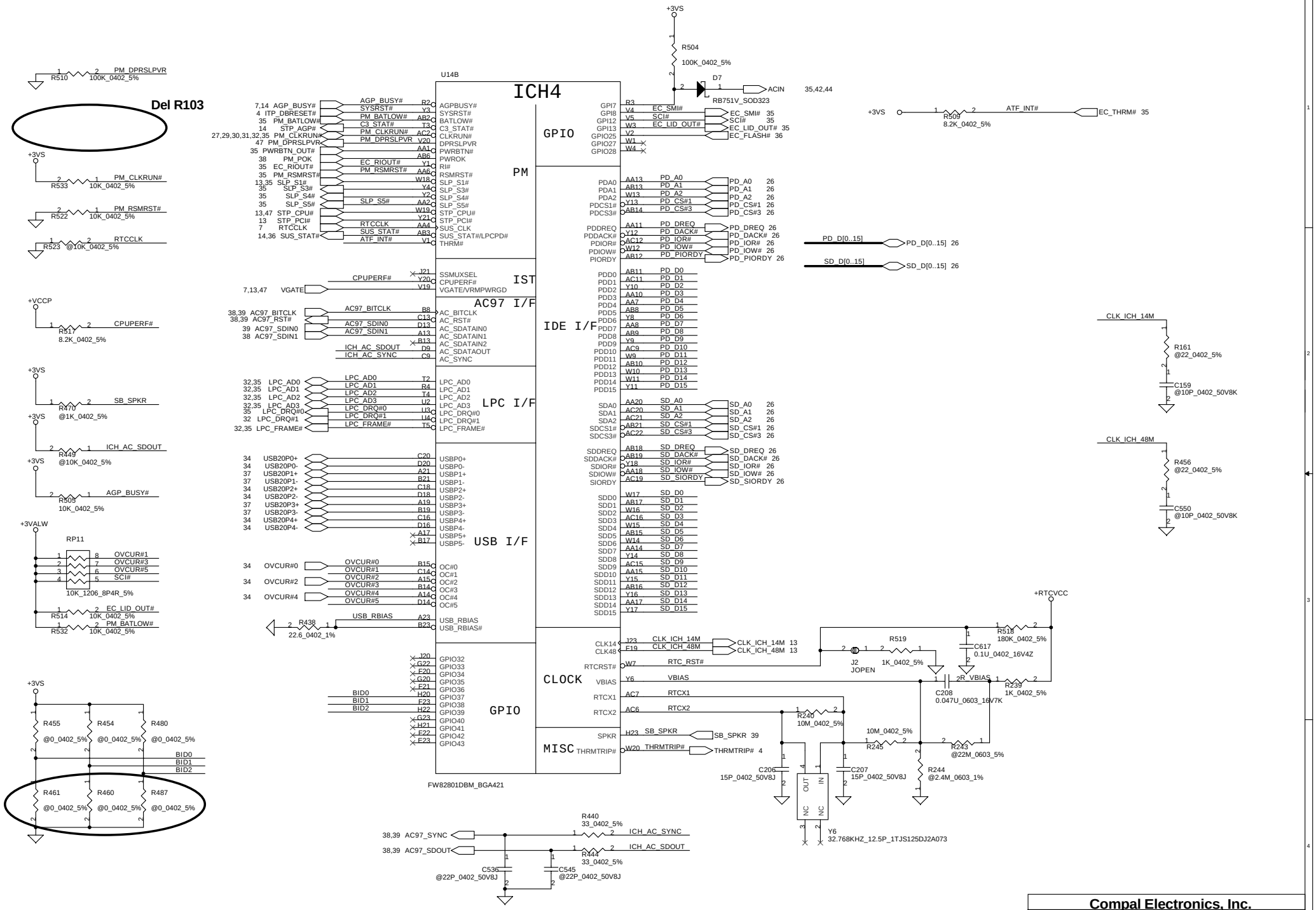

THIS SHEET OF ENGINEERING DRAWING IS THE PROPRIETARY PROPERTY OF COMPAL ELECTRONICS, INC. AND CONTAINS CONFIDENTIAL AND TRADE SECRET INFORMATION. THIS SHEET MAY NOT BE TRANSFERED FROM THE CUSTODY OF THE COMPETENT DIVISION OF R&D DEPARTMENT EXCEPT AS AUTHORIZED BY COMPAL ELECTRONICS, INC. NEITHER THIS SHEET NOR THE INFORMATION IT CONTAINS MAY BE USED BY OR DISCLOSED TO ANY THIRD PARTY WITHOUT PRIOR WRITTEN CONSENT OF COMPAL ELECTRONICS, INC.

Compal Electronics, Inc.	
Title	SCHEMATIC M/B LA-2242
Size	Document Number: 401289 — Rev 2A
Date: 星期一, 四月 19, 2004	Sheet 24 of 101

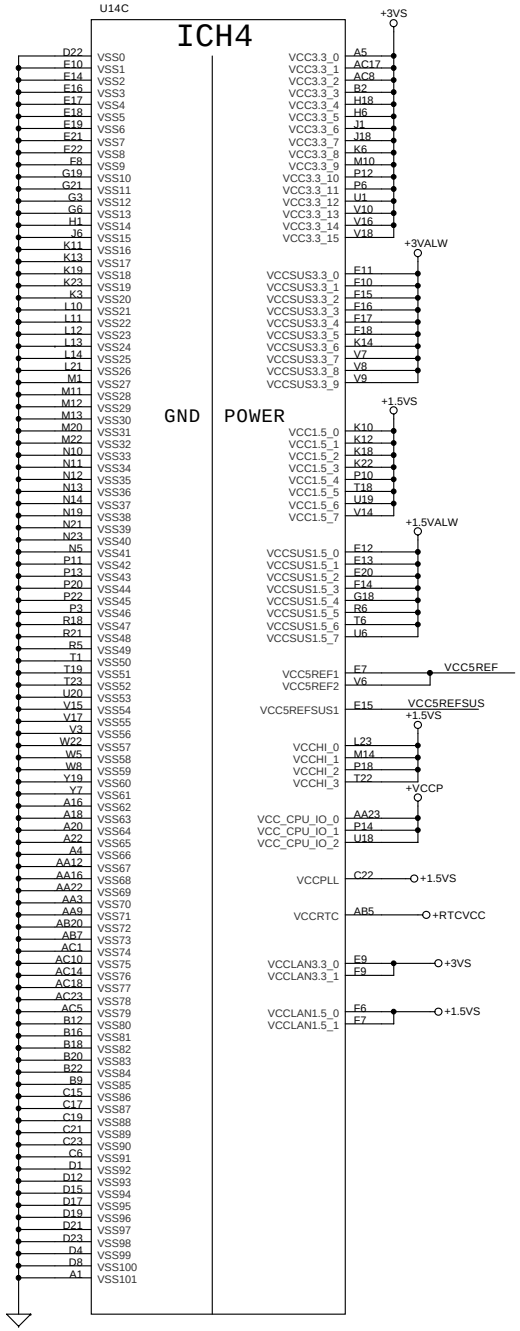

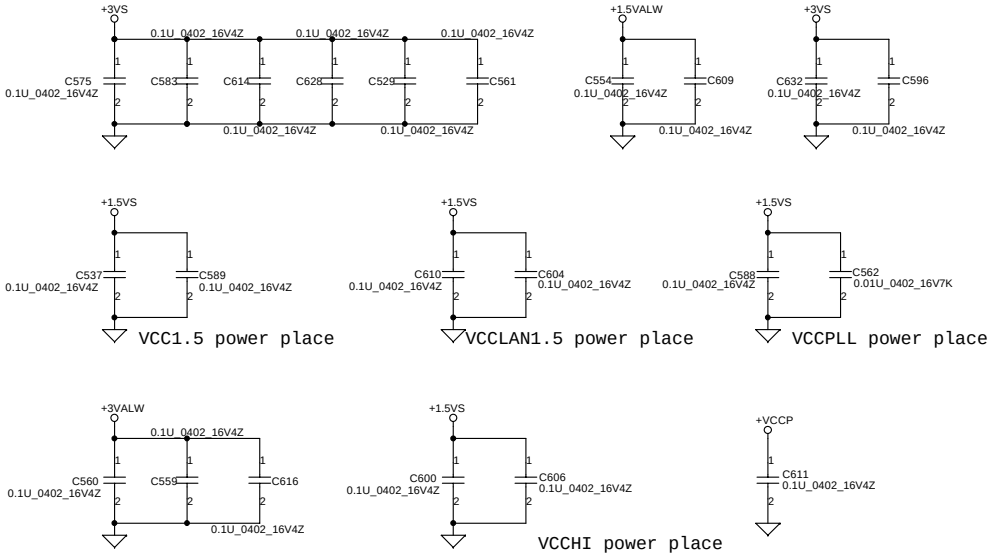

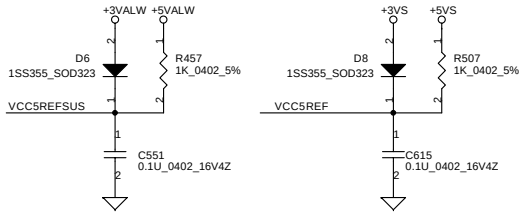

RTC Battery

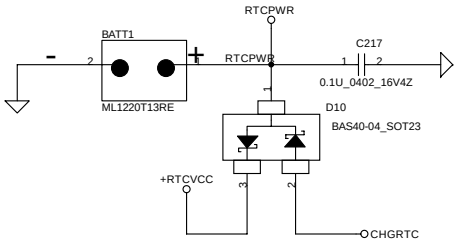

THIS SHEET OF ENGINEERING DRAWING IS THE PROPRIETARY PROPERTY OF COMPAL ELECTRONICS, INC. AND CONTAINS CONFIDENTIAL AND TRADE SECRET INFORMATION. THIS SHEET MAY NOT BE TRANSFERED FROM THE CUSTODY OF THE COMPETENT DIVISION OF R&D DEPARTMENT EXCEPT AS AUTHORIZED BY COMPAL ELECTRONICS, INC. NEITHER THIS SHEET NOR THE INFORMATION IT CONTAINS MAY BE USED BY OR DISCLOSED TO ANY THIRD PARTY WITHOUT PRIOR WRITTEN CONSENT OF COMPAL ELECTRONICS, INC.

Compal Electronics, Inc.

Title: SCHEMATIC M/B LA-2242

Size | Document Number: 401289 | Rev: 2A

Date: 星期一, 四月 19, 2004 | Sheet 25 of 101

Unpoped for EMI request

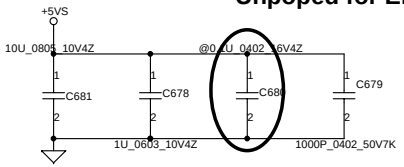

HDD CONN

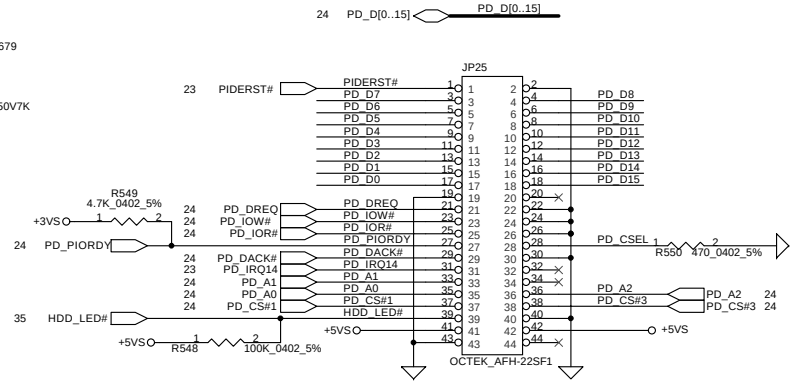

CDROM CONN

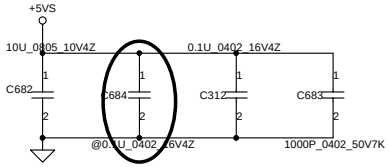

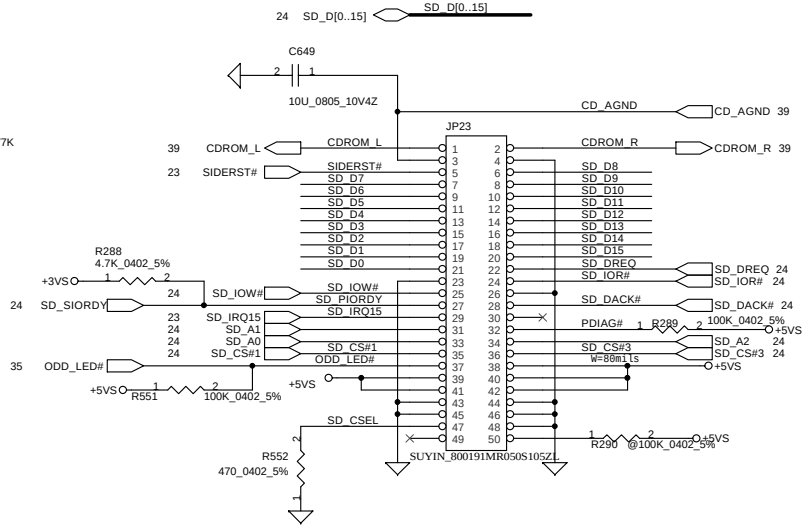

THIS SHEET OF ENGINEERING DRAWING IS THE PROPRIETARY PROPERTY OF COMPAL ELECTRONICS, INC. AND CONTAINS CONFIDENTIAL AND TRADE SECRET INFORMATION. THIS SHEET MAY NOT BE TRANSFERED FROM THE CUSTODY OF THE COMPETENT DIVISION OF R&D DEPARTMENT EXCEPT AS AUTHORIZED BY COMPAL ELECTRONICS, INC. NEITHER THIS SHEET NOR THE INFORMATION IT CONTAINS MAY BE USED BY OR DISCLOSED TO ANY THIRD PARTY WITHOUT PRIOR WRITTEN CONSENT OF COMPAL ELECTRONICS, INC.

Compal Electronics, Inc.

Title: SCHEMATIC M/B LA-2242

Size | Document Number: 401289 | Rev: 2A

Date: 星期一, 四月 19, 2004 | Sheet 26 of 101

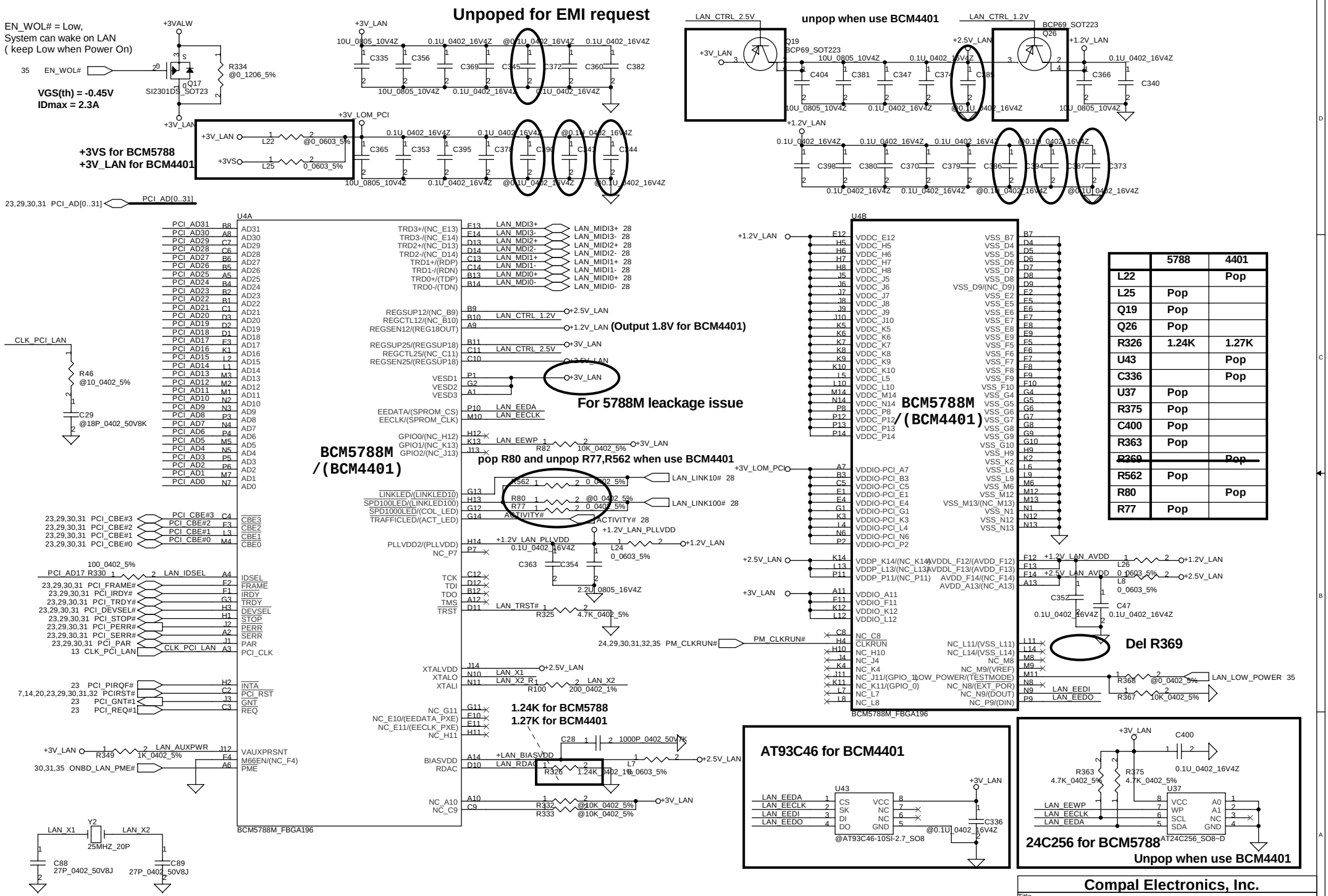

	5788	4401
L22		Pop
L25	Pop	
Q19	Pop	
Q26	Pop	
R326	1.24K	1.27K
U43		Pop
C336		Pop
U37	Pop	
R375	Pop	
C400	Pop	
R363	Pop	
~~R369~~		~~Pop~~
R562	Pop	
R80		Pop
R77	Pop	

THIS SHEET OF ENGINEERING DRAWING IS THE PROPRIETARY PROPERTY OF COMPAL ELECTRONICS, INC. AND CONTAINS CONFIDENTIAL AND TRADE SECRET INFORMATION. THIS SHEET MAY NOT BE TRANSFERED FROM THE CUSTODY OF THE COMPETENT DIVISION OF R&D DEPARTMENT EXCEPT AS AUTHORIZED BY COMPAL ELECTRONICS, INC. NEITHER THIS SHEET NOR THE INFORMATION IT CONTAINS MAY BE USED BY OR DISCLOSED TO ANY THIRD PARTY WITHOUT PRIOR WRITTEN CONSENT OF COMPAL ELECTRONICS, INC.

Compal Electronics, Inc.

Title: SCHEMATIC M/B LA-2242

Size: B | Document Number: 401289 | Rev: 2A

Date: 星期一, 四月 19, 2004 | Sheet 27 of 101

LAN BCM5788M/BCM4401KFB

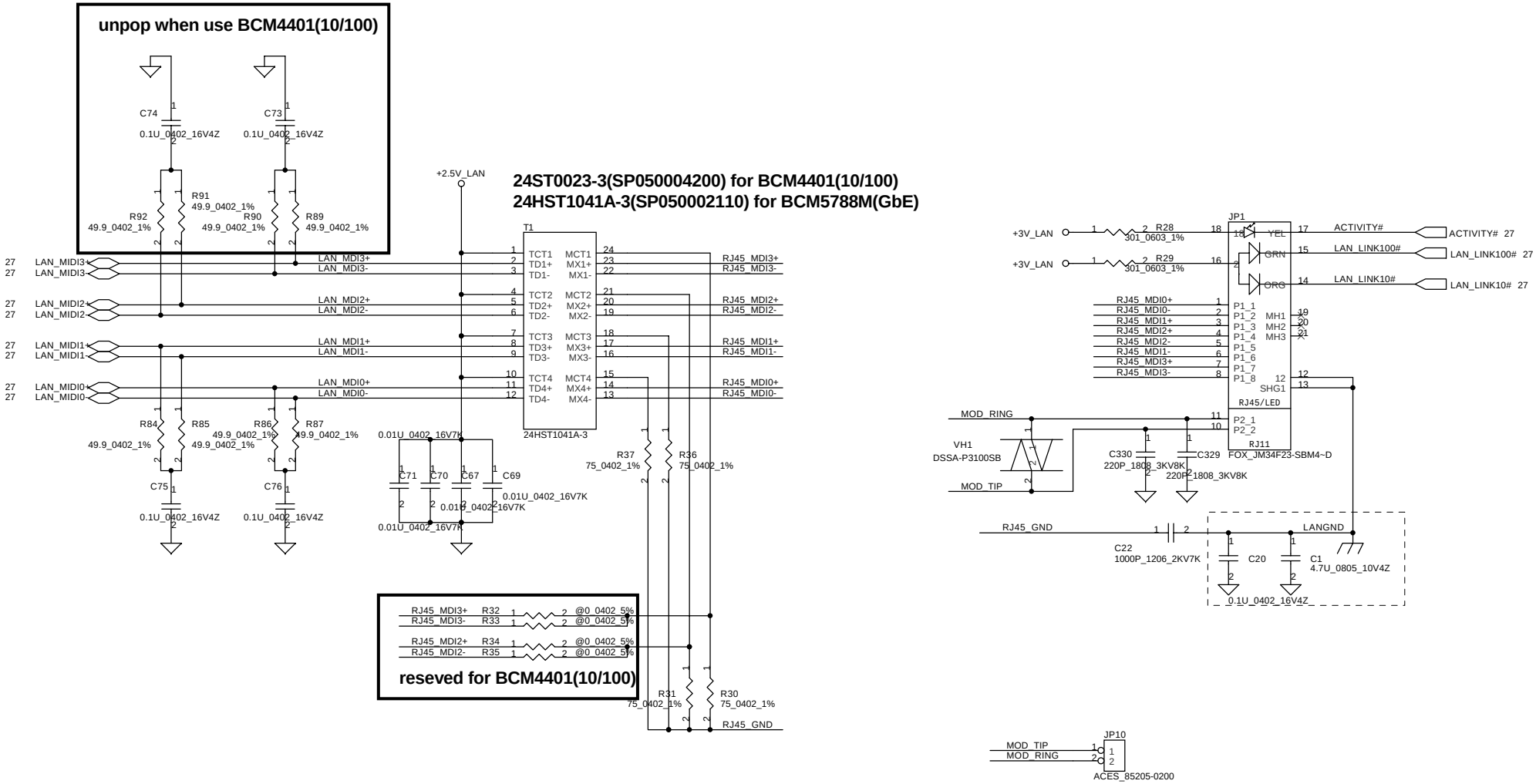

THIS SHEET OF ENGINEERING DRAWING IS THE PROPRIETARY PROPERTY OF COMPAL ELECTRONICS, INC. AND CONTAINS CONFIDENTIAL AND TRADE SECRET INFORMATION. THIS SHEET MAY NOT BE TRANSFERED FROM THE CUSTODY OF THE COMPETENT DIVISION OF R&D DEPARTMENT EXCEPT AS AUTHORIZED BY COMPAL ELECTRONICS, INC. NEITHER THIS SHEET NOR THE INFORMATION IT CONTAINS MAY BE USED BY OR DISCLOSED TO ANY THIRD PARTY WITHOUT PRIOR WRITTEN CONSENT OF COMPAL ELECTRONICS, INC.

Compal Electronics, Inc.	
Title	SCHEMATIC M/B LA-2242
Size B	Document Number 401289
Rev 2A	
Date: 星期一, 四月 19, 2004	Sheet 28 of 101

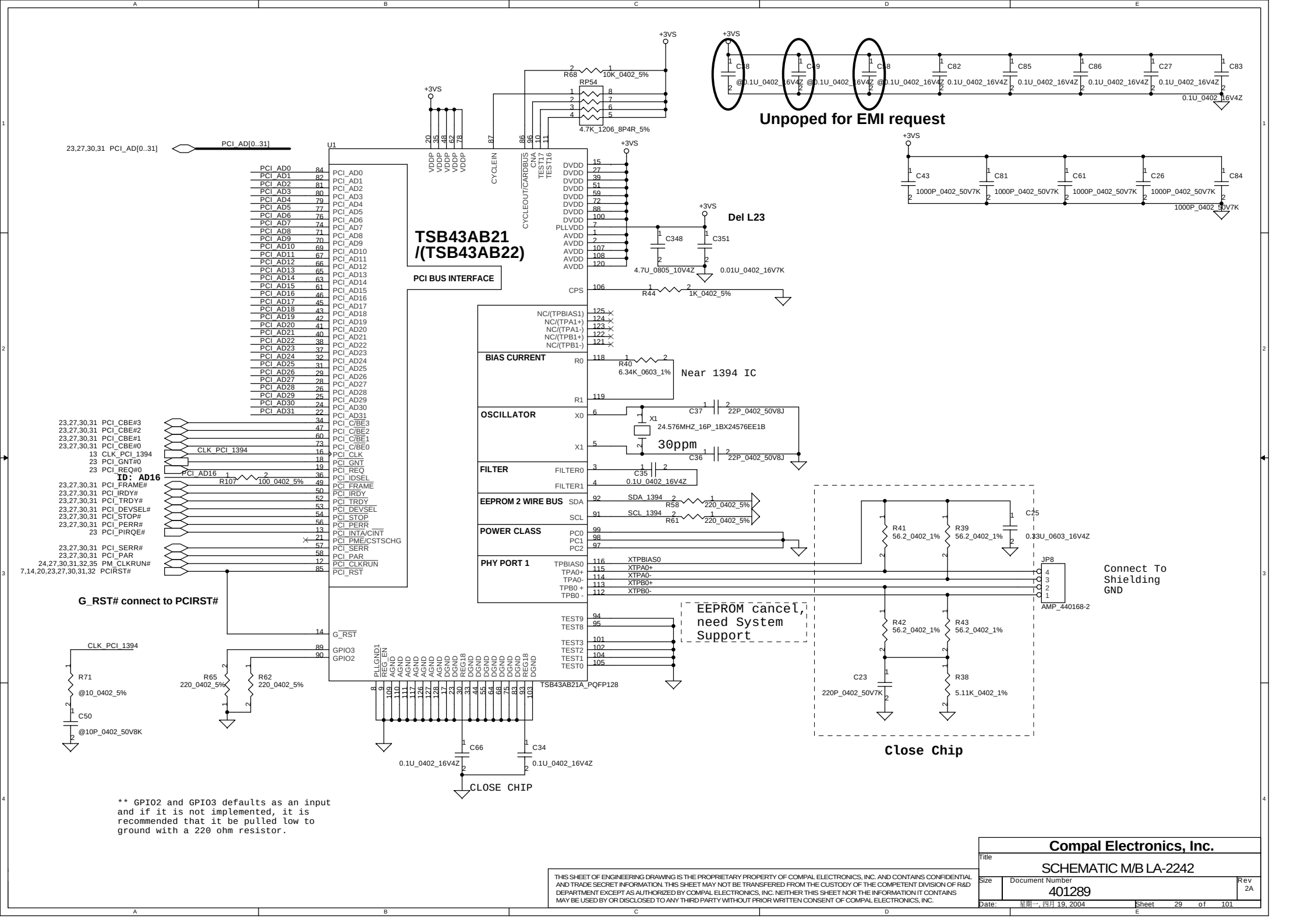

THIS SHEET OF ENGINEERING DRAWING IS THE PROPRIETARY PROPERTY OF COMPAL ELECTRONICS, INC. AND CONTAINS CONFIDENTIAL AND TRADE SECRET INFORMATION. THIS SHEET MAY NOT BE TRANSFERED FROM THE CUSTODY OF THE COMPETENT DIVISION OF R&D DEPARTMENT EXCEPT AS AUTHORIZED BY COMPAL ELECTRONICS, INC. NEITHER THIS SHEET NOR THE INFORMATION IT CONTAINS MAY BE USED BY OR DISCLOSED TO ANY THIRD PARTY WITHOUT PRIOR WRITTEN CONSENT OF COMPAL ELECTRONICS, INC.

Compal Electronics, Inc.	
Title	SCHEMATIC M/B LA-2242
Size	Document Number 401289
Rev	2A
Date:	星期一, 四月 19, 2004
Sheet	29 of 101

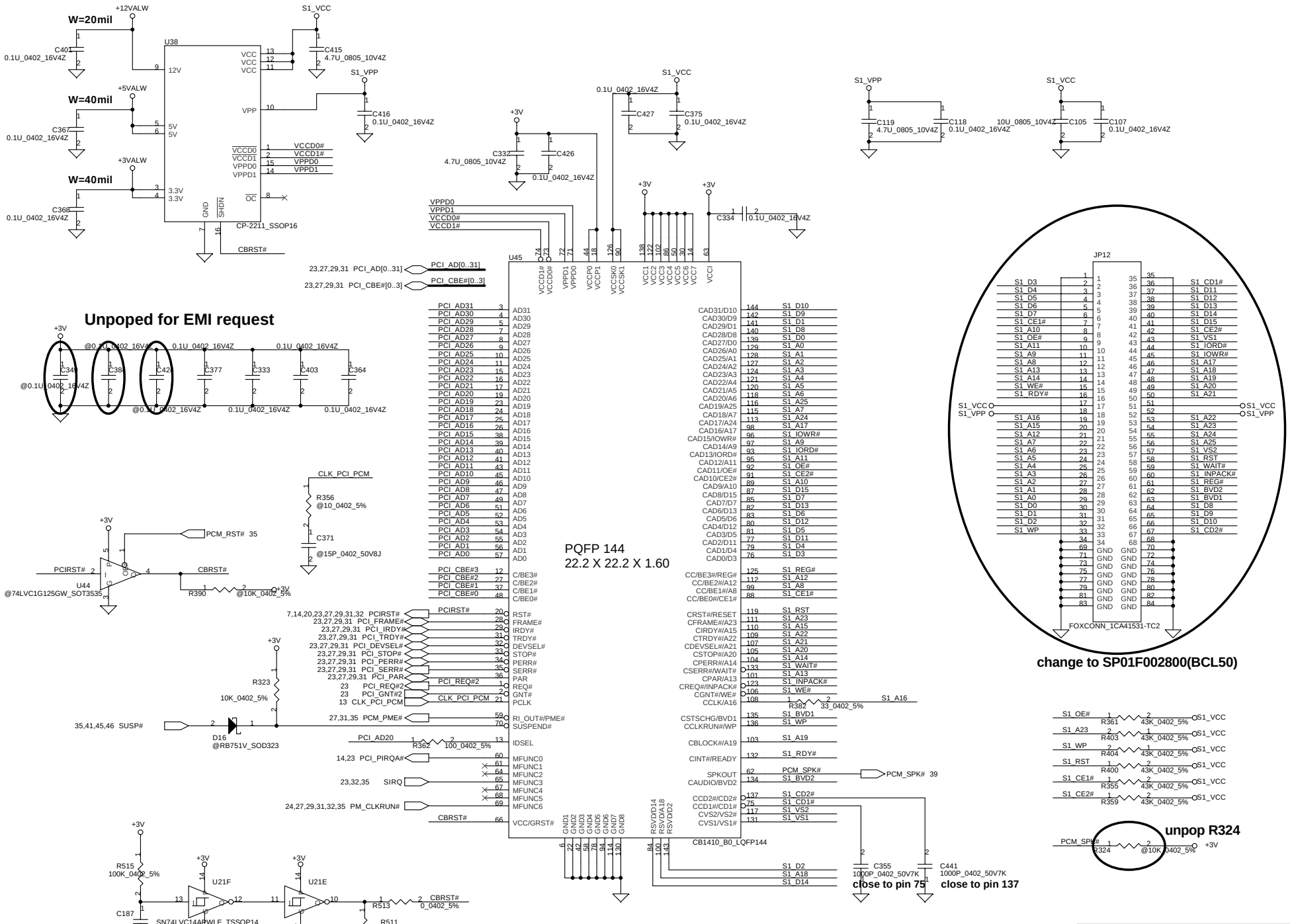

THIS SHEET OF ENGINEERING DRAWING IS THE PROPRIETARY PROPERTY OF COMPAL ELECTRONICS, INC. AND CONTAINS CONFIDENTIAL AND TRADE SECRET INFORMATION. THIS SHEET MAY NOT BE TRANSFERED FROM THE CUSTODY OF THE COMPETENT DIVISION OF R&D DEPARTMENT EXCEPT AS AUTHORIZED BY COMPAL ELECTRONICS, INC. NEITHER THIS SHEET NOR THE INFORMATION IT CONTAINS MAY BE USED BY OR DISCLOSED TO ANY THIRD PARTY WITHOUT PRIOR WRITTEN CONSENT OF COMPAL ELECTRONICS, INC.

Compal Electronics, Inc.

Title: SCHEMATIC M/B LA-2242

Size: | Document Number: 401289 | Rev: 2A

Date: 星期一, 四月 19, 2004 | Sheet 30 of 101

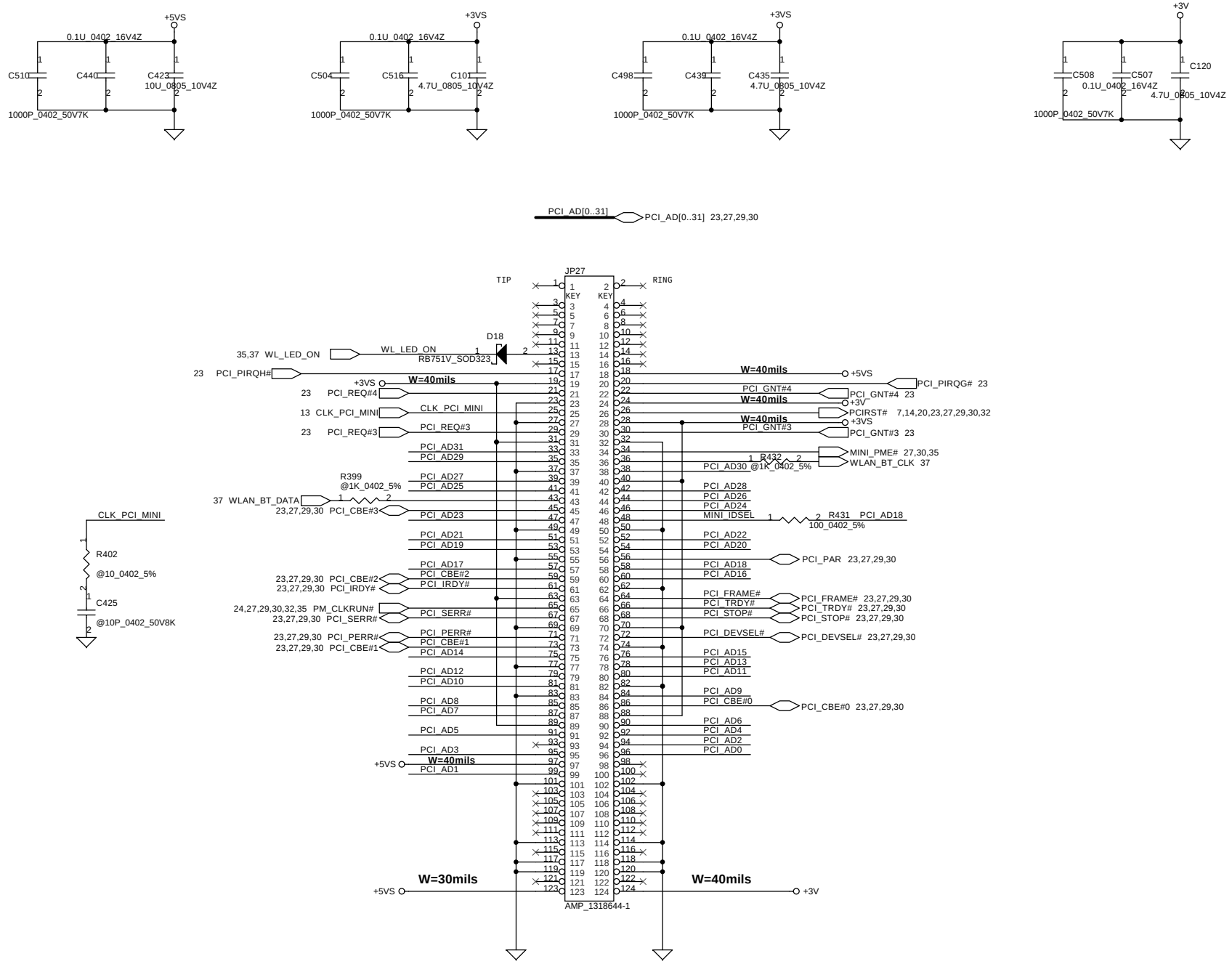

THIS SHEET OF ENGINEERING DRAWING IS THE PROPRIETARY PROPERTY OF COMPAL ELECTRONICS, INC. AND CONTAINS CONFIDENTIAL AND TRADE SECRET INFORMATION. THIS SHEET MAY NOT BE TRANSFERED FROM THE CUSTODY OF THE COMPETENT DIVISION OF R&D DEPARTMENT EXCEPT AS AUTHORIZED BY COMPAL ELECTRONICS, INC. NEITHER THIS SHEET NOR THE INFORMATION IT CONTAINS MAY BE USED BY OR DISCLOSED TO ANY THIRD PARTY WITHOUT PRIOR WRITTEN CONSENT OF COMPAL ELECTRONICS, INC.

Compal Electronics, Inc.

Title	SCHEMATIC M/B LA-2242	
Size	Document Number 401289	Rev 2A
Date: 星期一, 四月 19, 2004	Sheet 31 of 101	

SUPER I/O SMsC LPC47N217

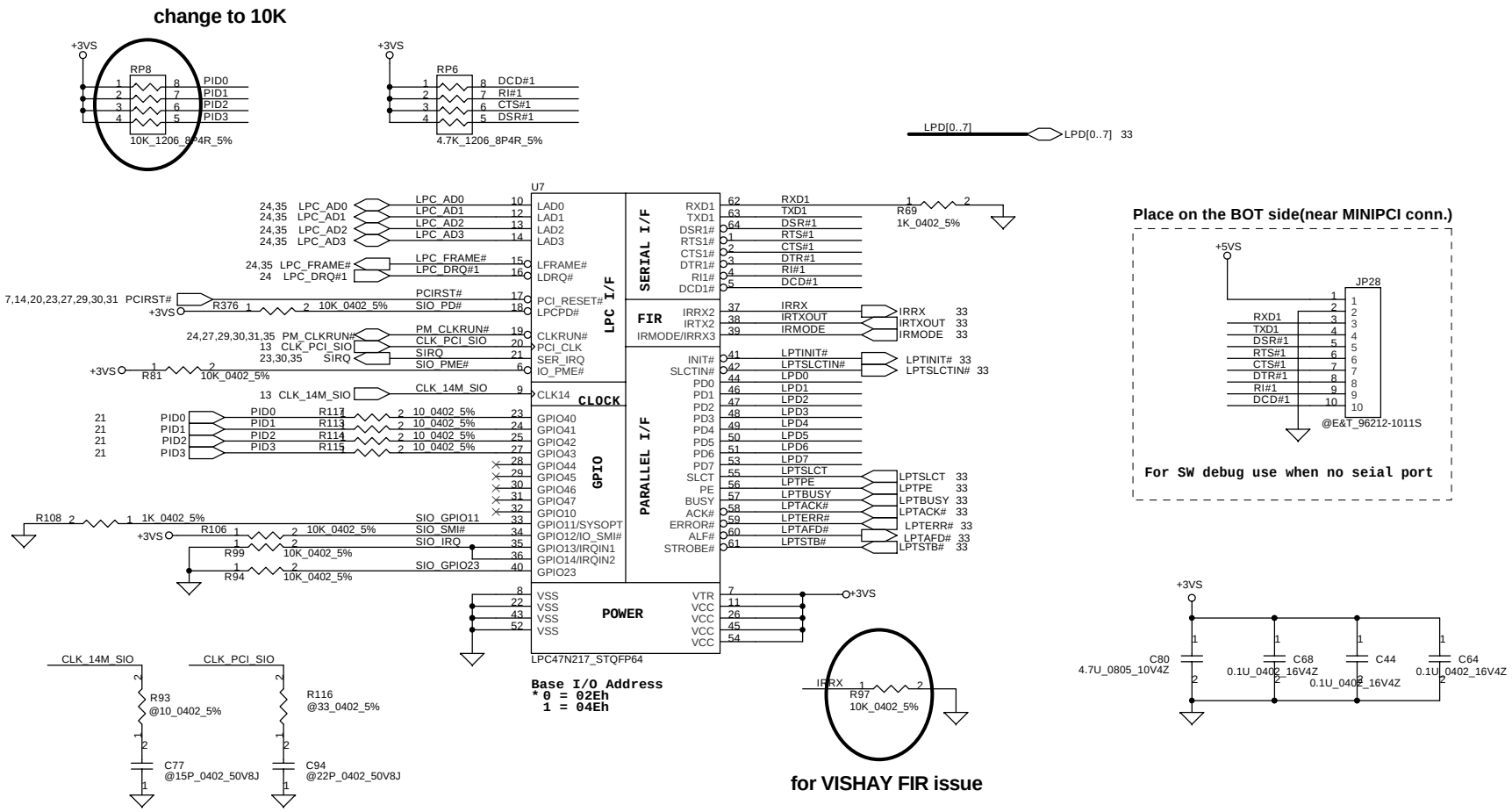

THIS SHEET OF ENGINEERING DRAWING IS THE PROPRIETARY PROPERTY OF COMPAL ELECTRONICS, INC. AND CONTAINS CONFIDENTIAL AND TRADE SECRET INFORMATION. THIS SHEET MAY NOT BE TRANSFERED FROM THE CUSTODY OF THE COMPETENT DIVISION OF R&D DEPARTMENT EXCEPT AS AUTHORIZED BY COMPAL ELECTRONICS, INC. NEITHER THIS SHEET NOR THE INFORMATION IT CONTAINS MAY BE USED BY OR DISCLOSED TO ANY THIRD PARTY WITHOUT PRIOR WRITTEN CONSENT OF COMPAL ELECTRONICS, INC.

Compal Electronics, Inc.	
Title	SCHEMATIC M/B LA-2242
Size B	Document Number 401289
Rev	2A
Date: 星期一, 四月 19, 2004	Sheet 32 of 101

Parallel Port

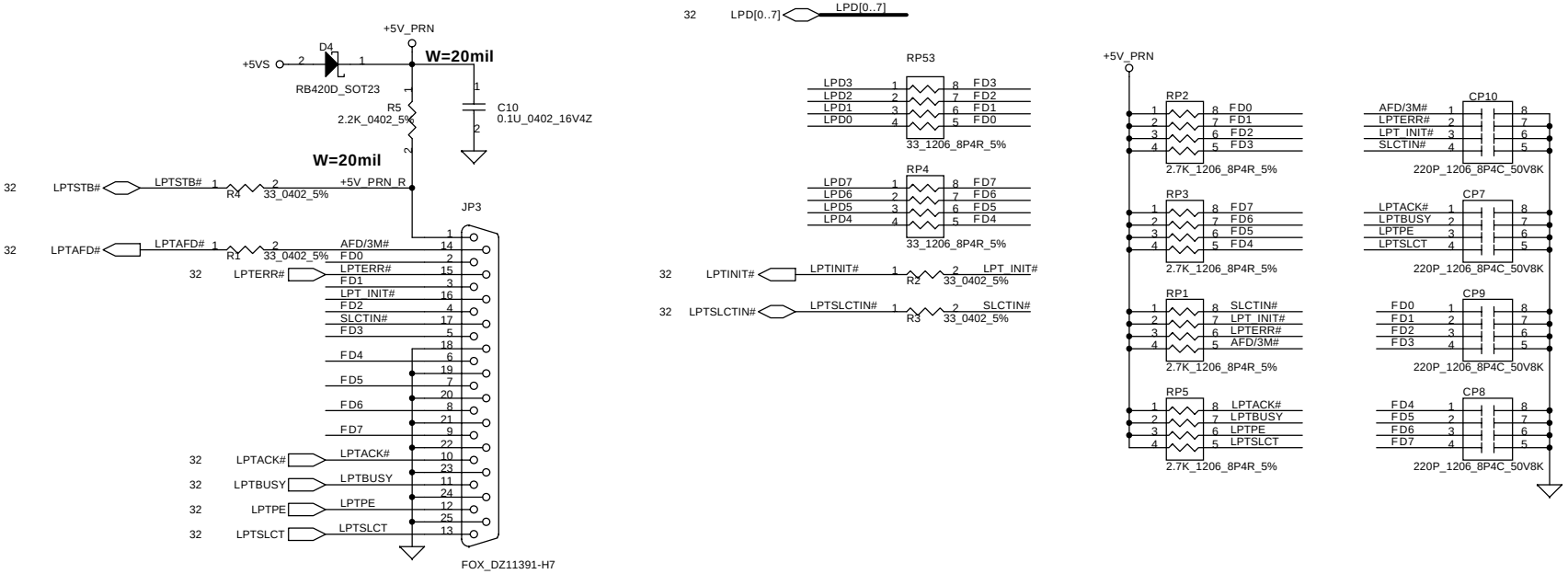

FIR Module

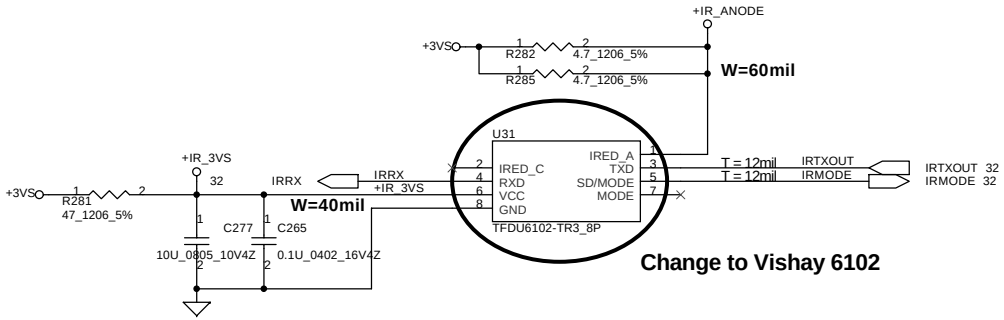

THIS SHEET OF ENGINEERING DRAWING IS THE PROPRIETARY PROPERTY OF COMPAL ELECTRONICS, INC. AND CONTAINS CONFIDENTIAL AND TRADE SECRET INFORMATION. THIS SHEET MAY NOT BE TRANSFERED FROM THE CUSTODY OF THE COMPETENT DIVISION OF R&D DEPARTMENT EXCEPT AS AUTHORIZED BY COMPAL ELECTRONICS, INC. NEITHER THIS SHEET NOR THE INFORMATION IT CONTAINS MAY BE USED BY OR DISCLOSED TO ANY THIRD PARTY WITHOUT PRIOR WRITTEN CONSENT OF COMPAL ELECTRONICS, INC.

Compal Electronics, Inc.		
Title: SCHEMATIC M/B LA-2242		
Size	Document Number: 401289	Rev: 2A
Date: 星期一, 四月 19, 2004	Sheet 33 of 101	

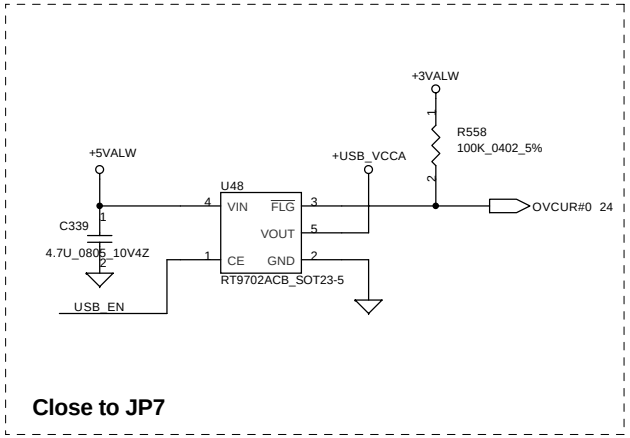

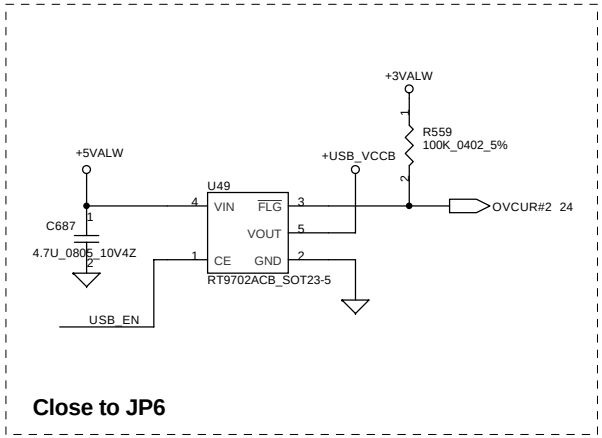

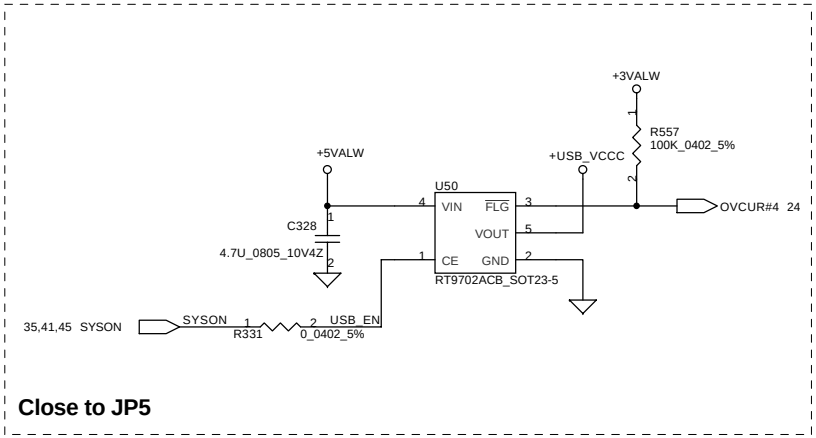

USB CONN. 1

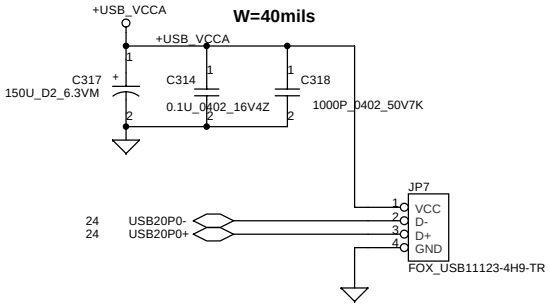

USB CONN. 2

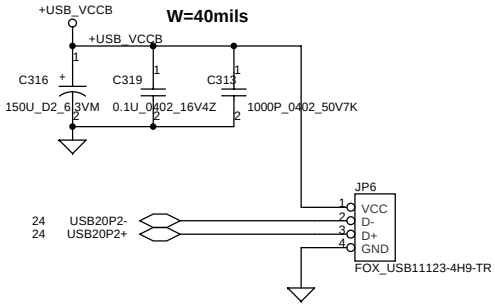

USB CONN. 3

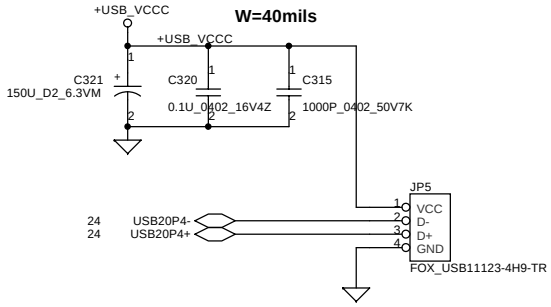

THIS SHEET OF ENGINEERING DRAWING IS THE PROPRIETARY PROPERTY OF COMPAL ELECTRONICS, INC. AND CONTAINS CONFIDENTIAL AND TRADE SECRET INFORMATION. THIS SHEET MAY NOT BE TRANSFERED FROM THE CUSTODY OF THE COMPETENT DIVISION OF R&D DEPARTMENT EXCEPT AS AUTHORIZED BY COMPAL ELECTRONICS, INC. NEITHER THIS SHEET NOR THE INFORMATION IT CONTAINS MAY BE USED BY OR DISCLOSED TO ANY THIRD PARTY WITHOUT PRIOR WRITTEN CONSENT OF COMPAL ELECTRONICS, INC.

Compal Electronics, Inc.		
Title: SCHEMATIC M/B LA-2242		
Size: B	Document Number: 401289	Rev: 2A
Date: 星期一, 四月 19, 2004	Sheet 34 of 101	

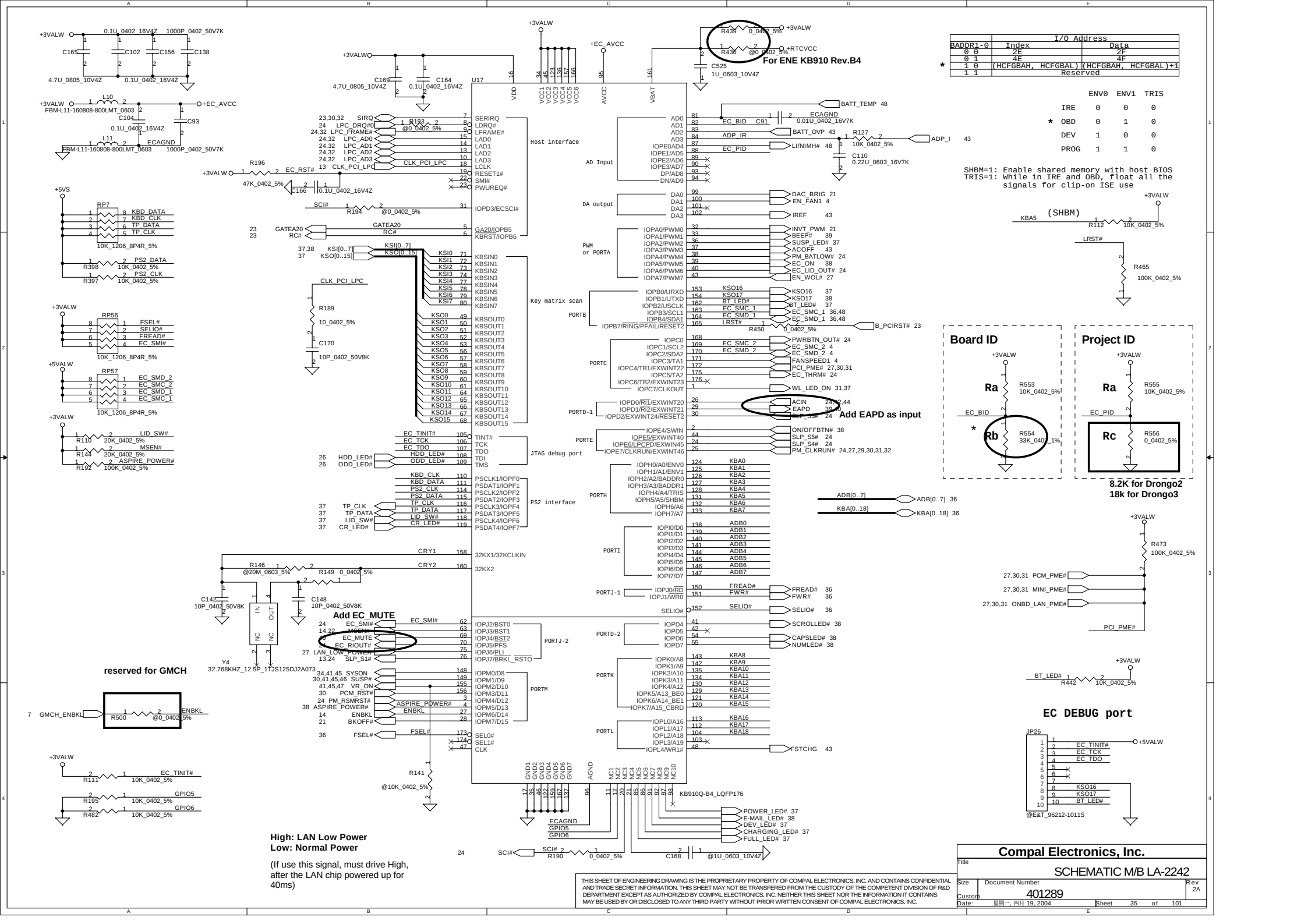

	I/O Address	
BADDR1-0	Index	Data
0 0	2E	2F
0 1	4E	4F
* 1 0	(HCFGBAH, HCFGBAL)	(HCFGBAH, HCFGBAL)+1
1 1	Reserved	

	ENV0	ENV1	TRIS
IRE	0	0	0
* OBD	0	1	0
DEV	1	0	0
PROG	1	1	0

SHBM=1: Enable shared memory with host BIOS
TRIS=1: While in IRE and OBD, float all the signals for clip-on ISE use

THIS SHEET OF ENGINEERING DRAWING IS THE PROPRIETARY PROPERTY OF COMPAL ELECTRONICS, INC. AND CONTAINS CONFIDENTIAL AND TRADE SECRET INFORMATION. THIS SHEET MAY NOT BE TRANSFERED FROM THE CUSTODY OF THE COMPETENT DIVISION OF R&D DEPARTMENT EXCEPT AS AUTHORIZED BY COMPAL ELECTRONICS, INC. NEITHER THIS SHEET NOR THE INFORMATION IT CONTAINS MAY BE USED BY OR DISCLOSED TO ANY THIRD PARTY WITHOUT PRIOR WRITTEN CONSENT OF COMPAL ELECTRONICS, INC.

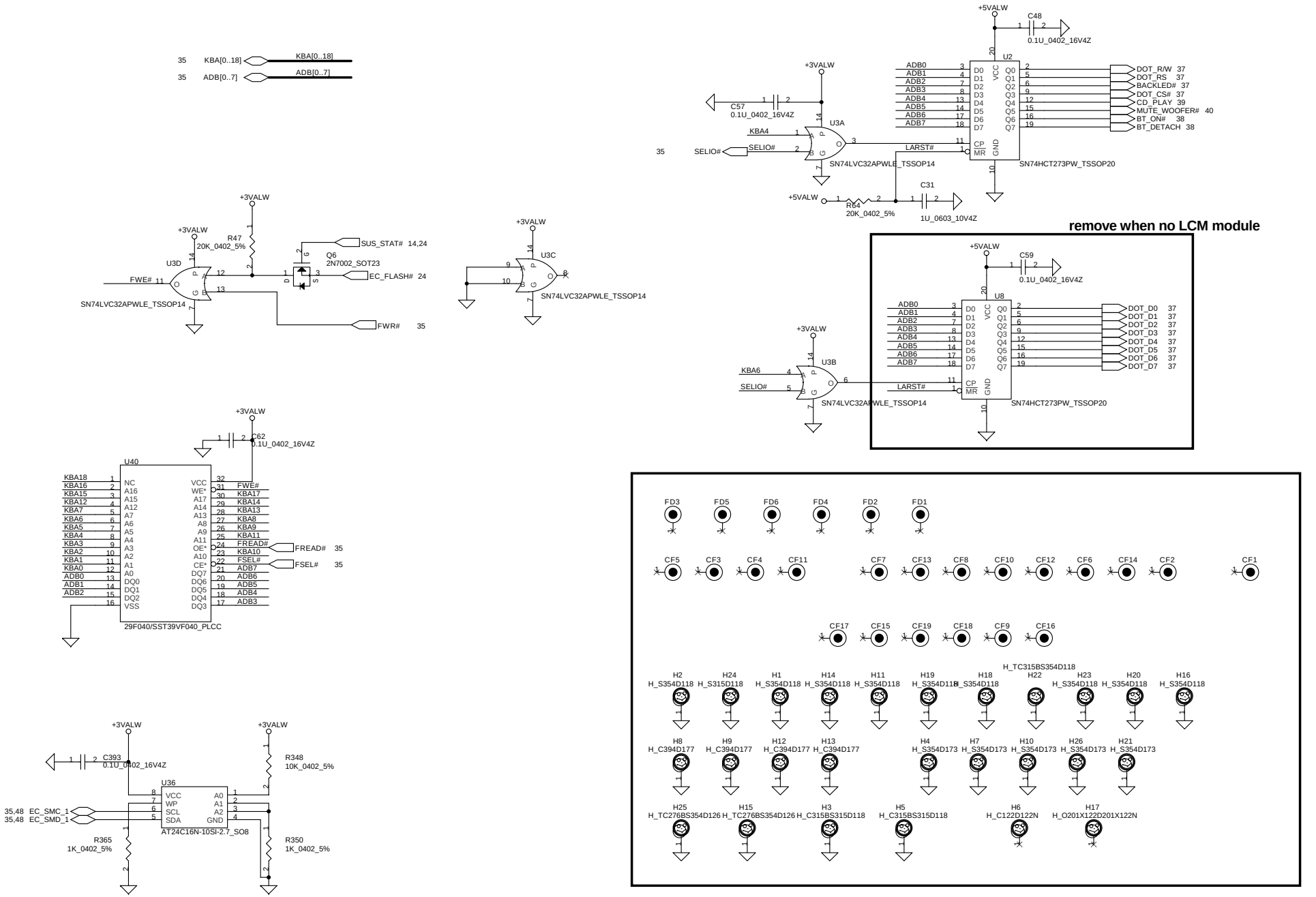

THIS SHEET OF ENGINEERING DRAWING IS THE PROPRIETARY PROPERTY OF COMPAL ELECTRONICS, INC. AND CONTAINS CONFIDENTIAL AND TRADE SECRET INFORMATION. THIS SHEET MAY NOT BE TRANSFERED FROM THE CUSTODY OF THE COMPETENT DIVISION OF R&D DEPARTMENT EXCEPT AS AUTHORIZED BY COMPAL ELECTRONICS, INC. NEITHER THIS SHEET NOR THE INFORMATION IT CONTAINS MAY BE USED BY OR DISCLOSED TO ANY THIRD PARTY WITHOUT PRIOR WRITTEN CONSENT OF COMPAL ELECTRONICS, INC.

Compal Electronics, Inc.

Title: SCHEMATIC M/B LA-2242

Size | Document Number: 401289 | Rev: 2A

Date: 星期一, 四月 19, 2004 | Sheet 36 of 101

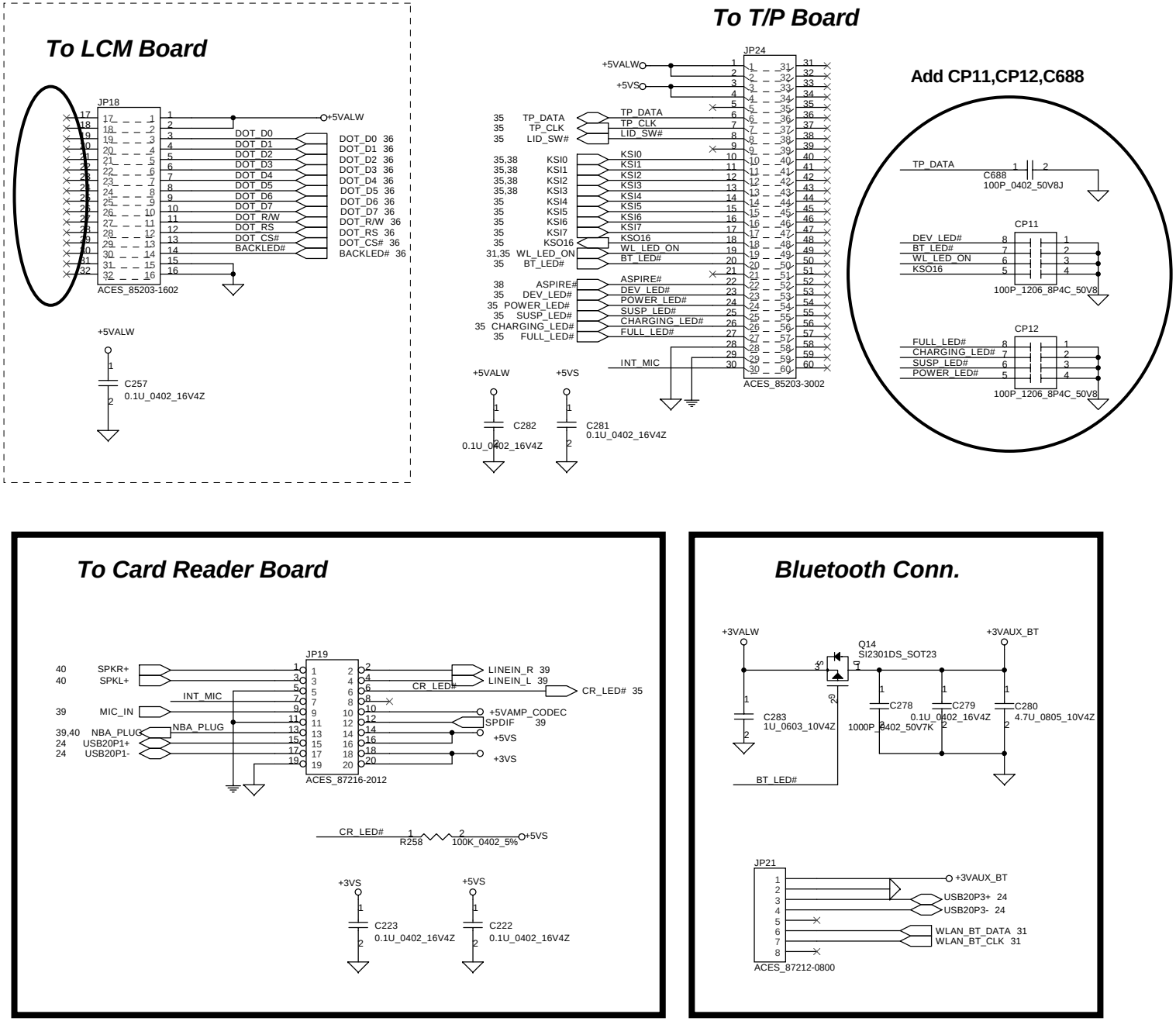

THIS SHEET OF ENGINEERING DRAWING IS THE PROPRIETARY PROPERTY OF COMPAL ELECTRONICS, INC. AND CONTAINS CONFIDENTIAL AND TRADE SECRET INFORMATION. THIS SHEET MAY NOT BE TRANSFERED FROM THE CUSTODY OF THE COMPETENT DIVISION OF R&D DEPARTMENT EXCEPT AS AUTHORIZED BY COMPAL ELECTRONICS, INC. NEITHER THIS SHEET NOR THE INFORMATION IT CONTAINS MAY BE USED BY OR DISCLOSED TO ANY THIRD PARTY WITHOUT PRIOR WRITTEN CONSENT OF COMPAL ELECTRONICS, INC.

Compal Electronics, Inc.

Title: SCHEMATIC M/B LA-2242

Size	Document Number	Rev
	401289	2A

Date: 星期一, 四月 19, 2004 Sheet 37 of 101

MDC Conn.

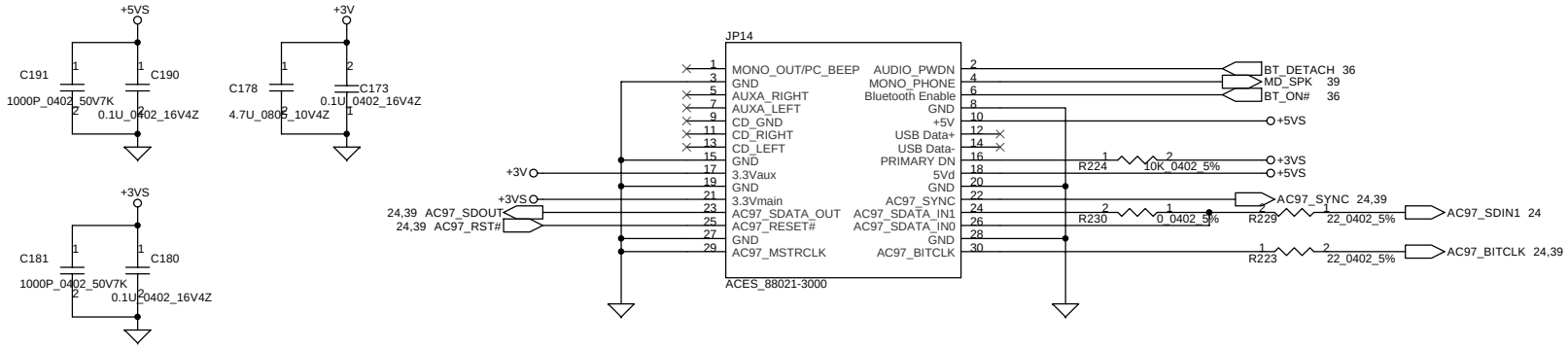

ON/OFF BUTTON

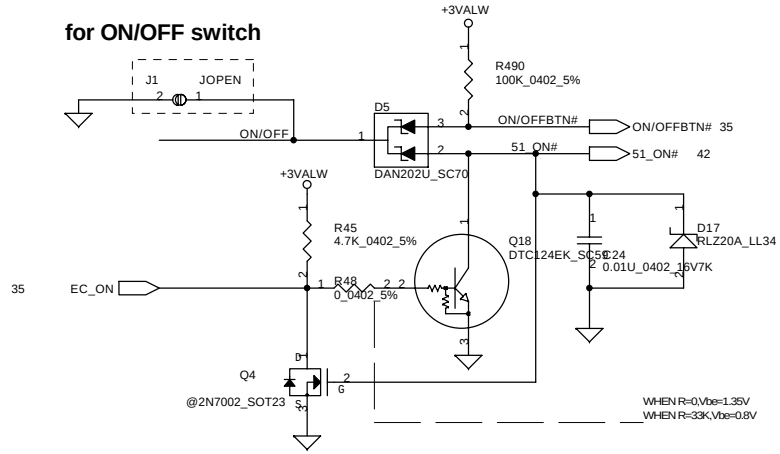

Power OK Circuit

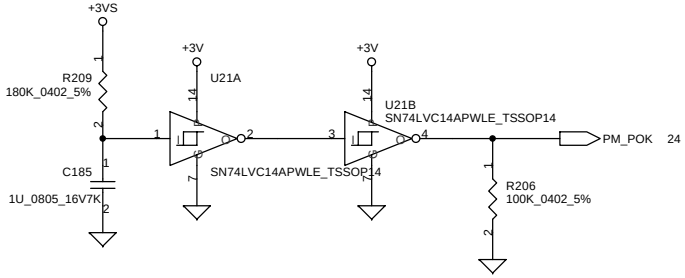

ASPIRE POWER

remove when no MEDIA/B

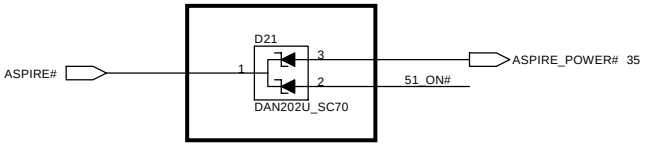

POWER/B CONN

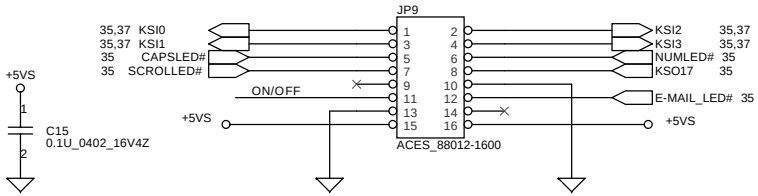

THIS SHEET OF ENGINEERING DRAWING IS THE PROPRIETARY PROPERTY OF COMPAL ELECTRONICS, INC. AND CONTAINS CONFIDENTIAL AND TRADE SECRET INFORMATION. THIS SHEET MAY NOT BE TRANSFERED FROM THE CUSTODY OF THE COMPETENT DIVISION OF R&D DEPARTMENT EXCEPT AS AUTHORIZED BY COMPAL ELECTRONICS, INC. NEITHER THIS SHEET NOR THE INFORMATION IT CONTAINS MAY BE USED BY OR DISCLOSED TO ANY THIRD PARTY WITHOUT PRIOR WRITTEN CONSENT OF COMPAL ELECTRONICS, INC.

Compal Electronics, Inc.		
Title: SCHEMATIC M/B LA-2242		
Size: B	Document Number: 401289	Rev: 2A
Date: 星期一, 四月 19, 2004	Sheet 38 of 101	

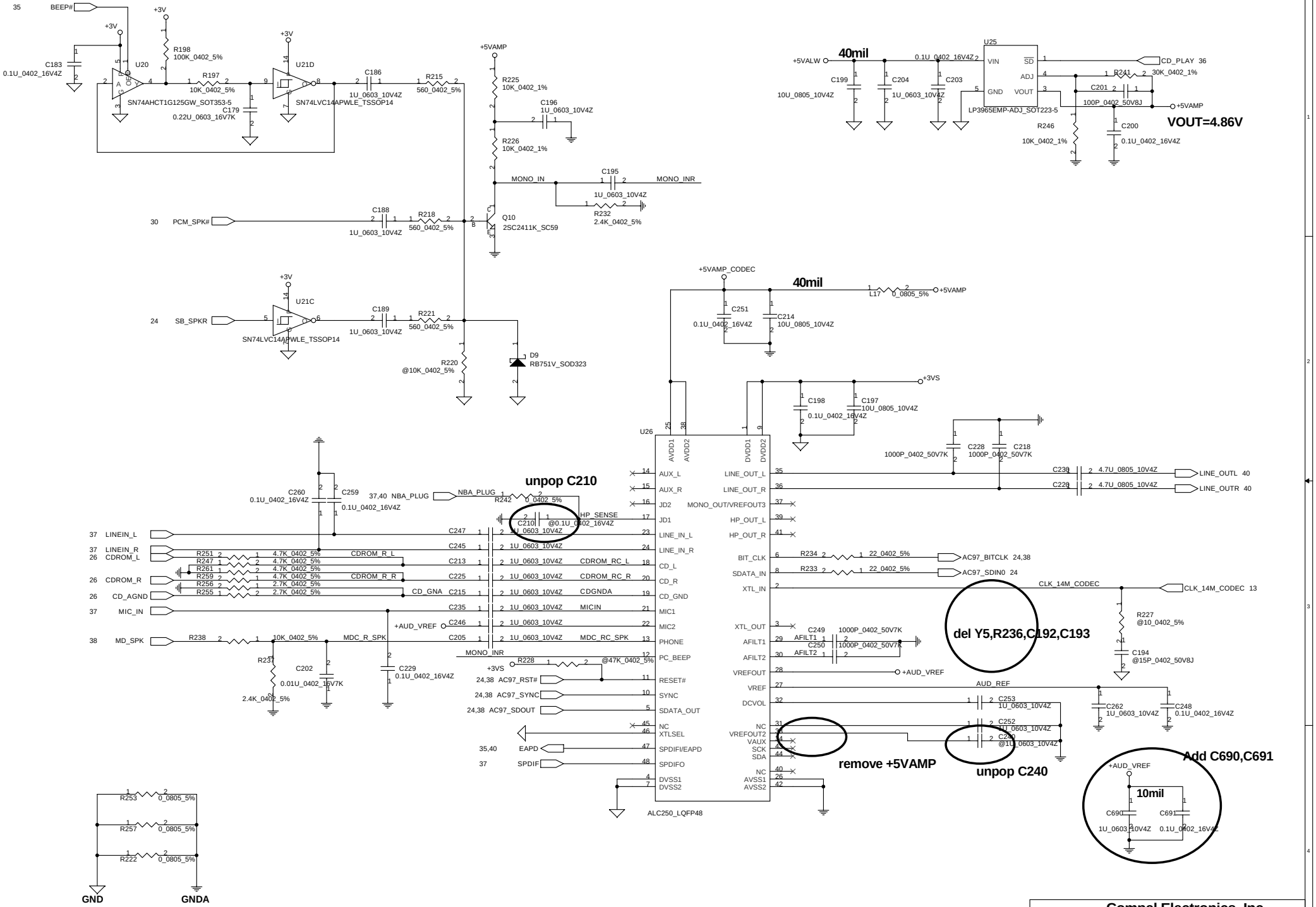

THIS SHEET OF ENGINEERING DRAWING IS THE PROPRIETARY PROPERTY OF COMPAL ELECTRONICS, INC. AND CONTAINS CONFIDENTIAL AND TRADE SECRET INFORMATION. THIS SHEET MAY NOT BE TRANSFERED FROM THE CUSTODY OF THE COMPETENT DIVISION OF R&D DEPARTMENT EXCEPT AS AUTHORIZED BY COMPAL ELECTRONICS, INC. NEITHER THIS SHEET NOR THE INFORMATION IT CONTAINS MAY BE USED BY OR DISCLOSED TO ANY THIRD PARTY WITHOUT PRIOR WRITTEN CONSENT OF COMPAL ELECTRONICS, INC.

Compal Electronics, Inc.	
Title	SCHEMATIC M/B LA-2242
Size / Document Number	401289
Rev	2A
Custom	
Date: 星期一, 四月 19, 2004	Sheet 39 of 101

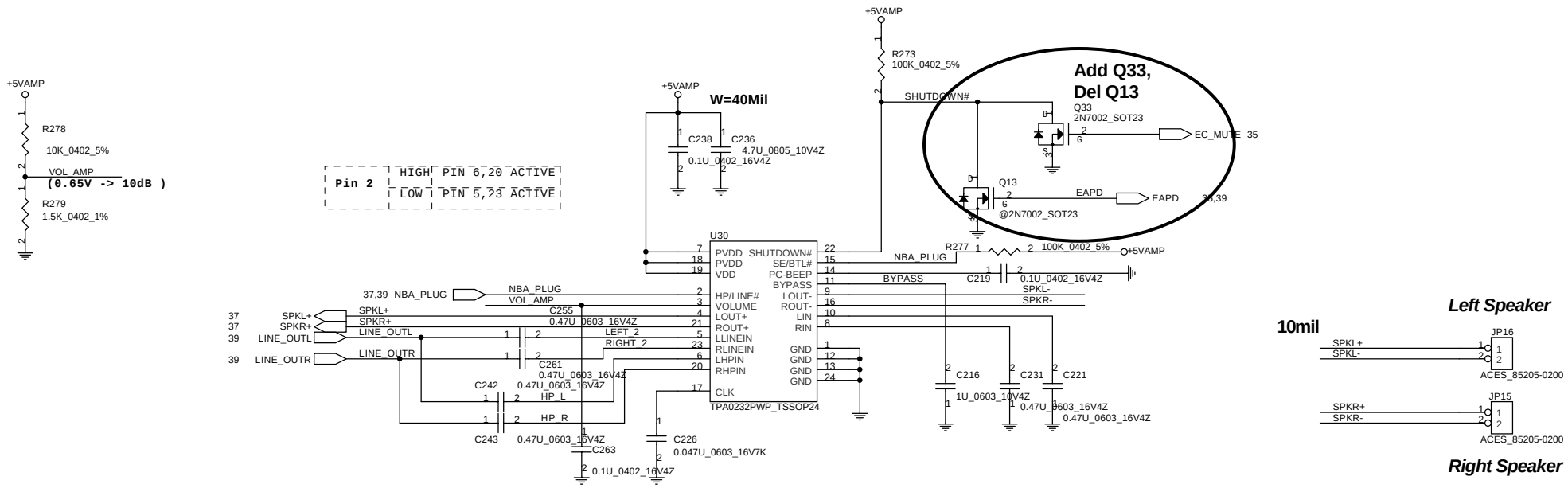

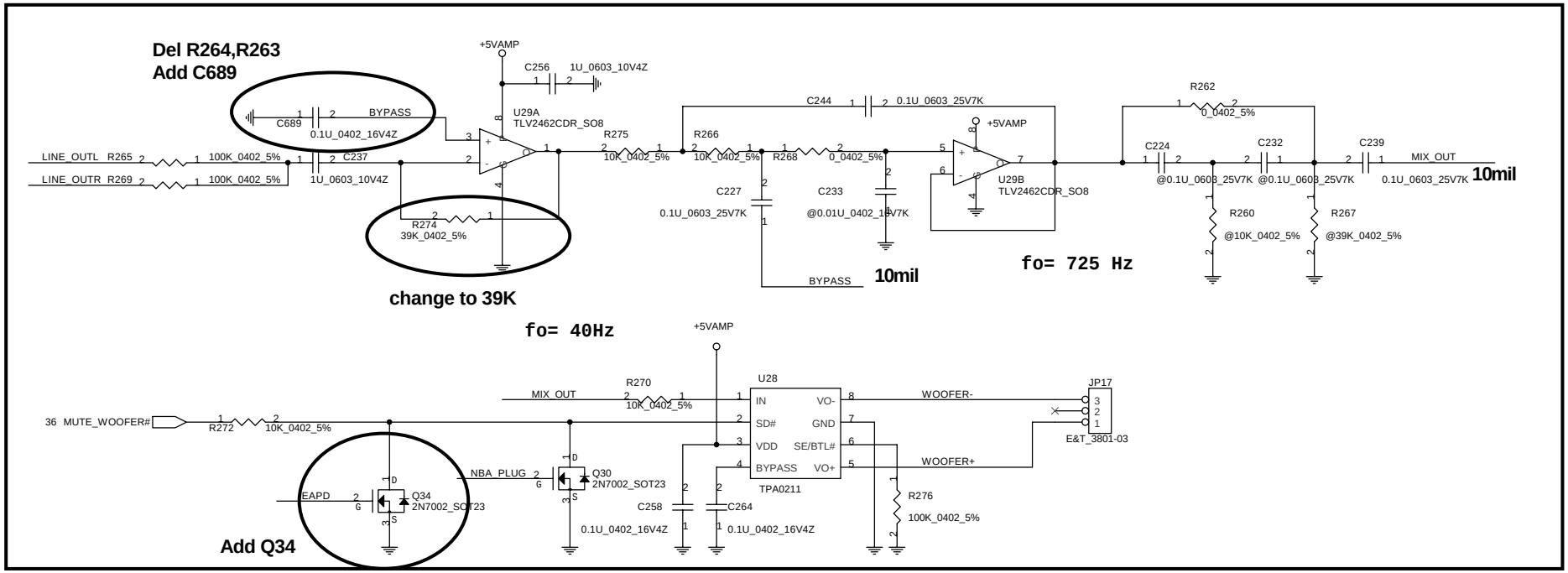

THIS SHEET OF ENGINEERING DRAWING IS THE PROPRIETARY PROPERTY OF COMPAL ELECTRONICS, INC. AND CONTAINS CONFIDENTIAL AND TRADE SECRET INFORMATION. THIS SHEET MAY NOT BE TRANSFERED FROM THE CUSTODY OF THE COMPETENT DIVISION OF R&D DEPARTMENT EXCEPT AS AUTHORIZED BY COMPAL ELECTRONICS, INC. NEITHER THIS SHEET NOR THE INFORMATION IT CONTAINS MAY BE USED BY OR DISCLOSED TO ANY THIRD PARTY WITHOUT PRIOR WRITTEN CONSENT OF COMPAL ELECTRONICS, INC.

Compal Electronics, Inc.		
Title: SCHEMATIC M/B LA-2242		
Size: B	Document Number: 401289	Rev: 2A
Date: 星期一, 四月 19, 2004	Sheet 40 of 101	

+3VALW to +3V Transfer

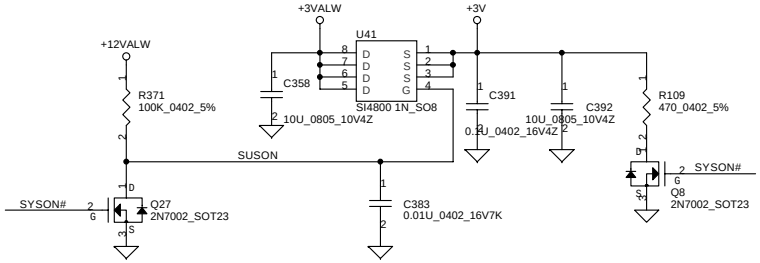

+5VALW to +5VS Transfer

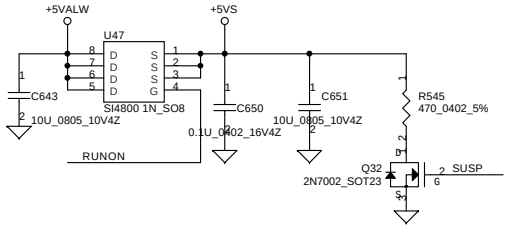

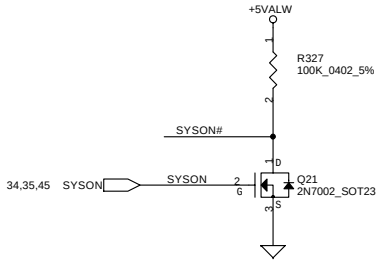

+3VALW to +3VS Transfer

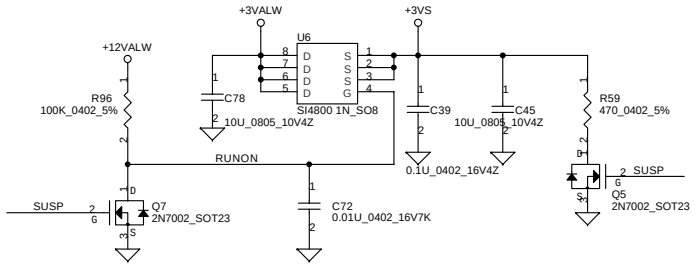

+1.5VALW to +1.5VS Transfer

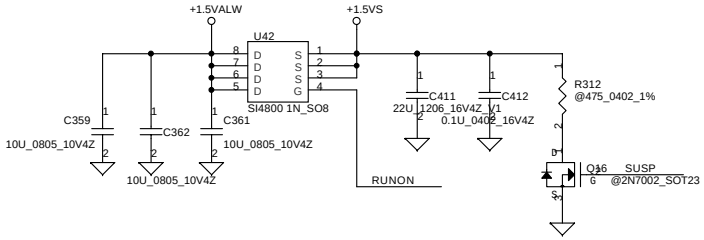

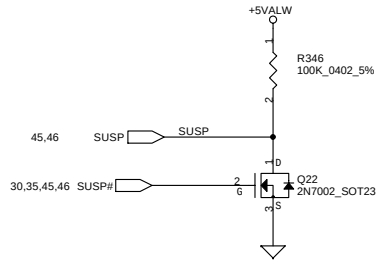

remove on Drongo4

+2.5V to +2.5VS Transfer

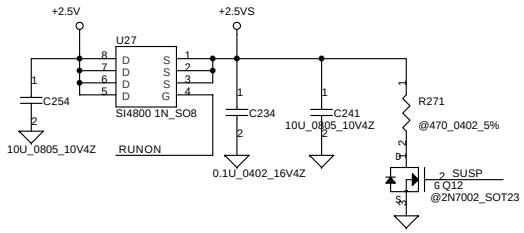

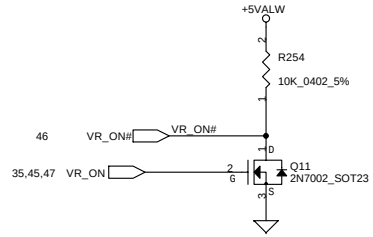

THIS SHEET OF ENGINEERING DRAWING IS THE PROPRIETARY PROPERTY OF COMPAL ELECTRONICS, INC. AND CONTAINS CONFIDENTIAL AND TRADE SECRET INFORMATION. THIS SHEET MAY NOT BE TRANSFERED FROM THE CUSTODY OF THE COMPETENT DIVISION OF R&D DEPARTMENT EXCEPT AS AUTHORIZED BY COMPAL ELECTRONICS, INC. NEITHER THIS SHEET NOR THE INFORMATION IT CONTAINS MAY BE USED BY OR DISCLOSED TO ANY THIRD PARTY WITHOUT PRIOR WRITTEN CONSENT OF COMPAL ELECTRONICS, INC.

Compal Electronics, Inc.	
Title	SCHEMATIC M/B LA-2242
Size / Document Number	401289
Rev	2A
Date: 星期一, 四月 19, 2004	Sheet 41 of 101

Detector

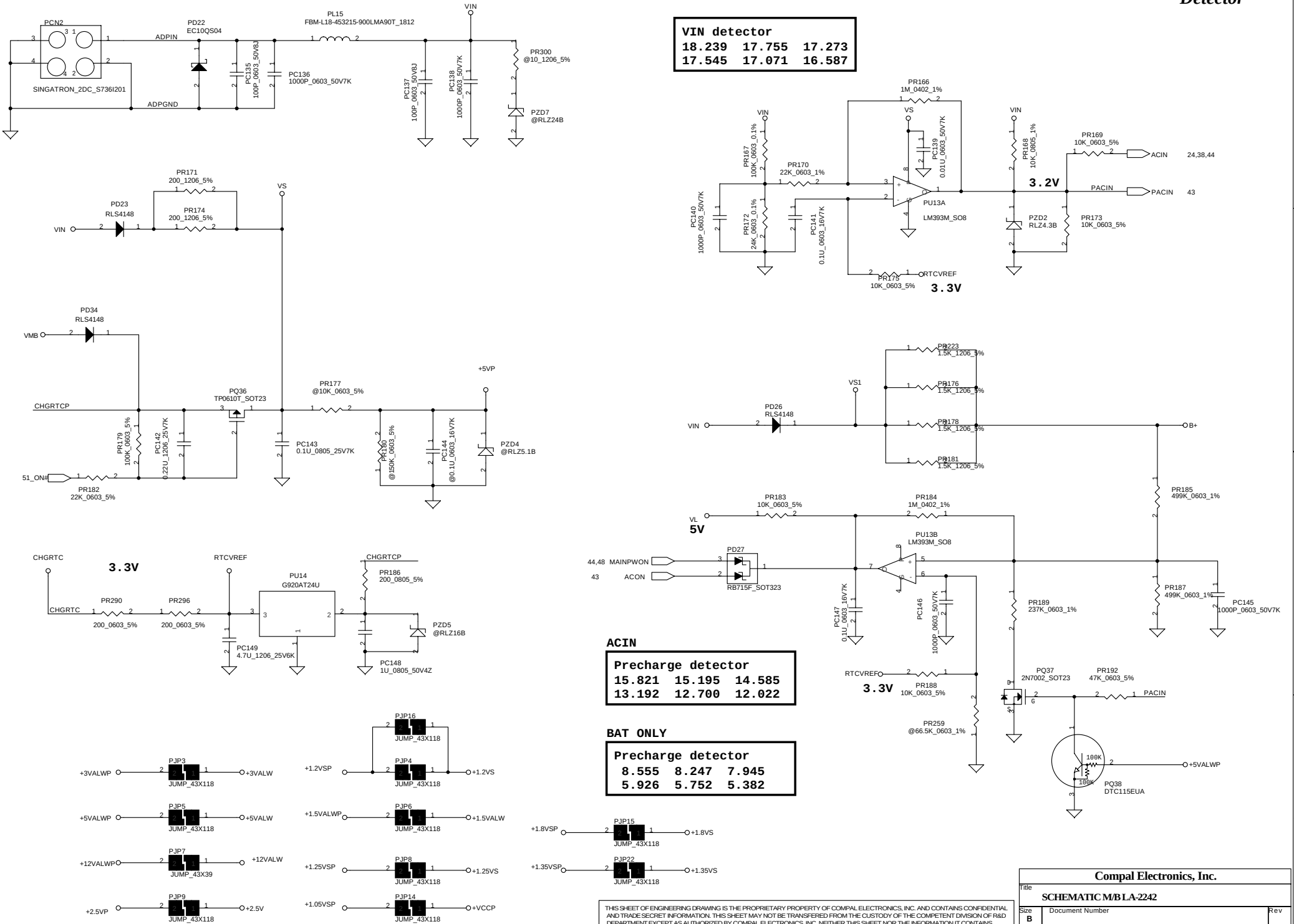

VIN detector

18.239	17.755	17.273
17.545	17.071	16.587

ACIN

Precharge detector

15.821	15.195	14.585
13.192	12.700	12.022

BAT ONLY

Precharge detector

8.555	8.247	7.945
5.926	5.752	5.382

THIS SHEET OF ENGINEERING DRAWING IS THE PROPRIETARY PROPERTY OF COMPAL ELECTRONICS, INC. AND CONTAINS CONFIDENTIAL AND TRADE SECRET INFORMATION. THIS SHEET MAY NOT BE TRANSFERED FROM THE CUSTODY OF THE COMPETENT DIVISION OF R&D DEPARTMENT EXCEPT AS AUTHORIZED BY COMPAL ELECTRONICS, INC. NEITHER THIS SHEET NOR THE INFORMATION IT CONTAINS MAY BE USED BY OR DISCLOSED TO ANY THIRD PARTY WITHOUT PRIOR WRITTEN CONSENT OF COMPAL ELECTRONICS, INC.

Compal Electronics, Inc.

Title: SCHEMATIC M/B LA-2242

Size: B | Document Number | Rev

Date: 星期一, 四月 19, 2004 | Sheet 42 of 101

Charger

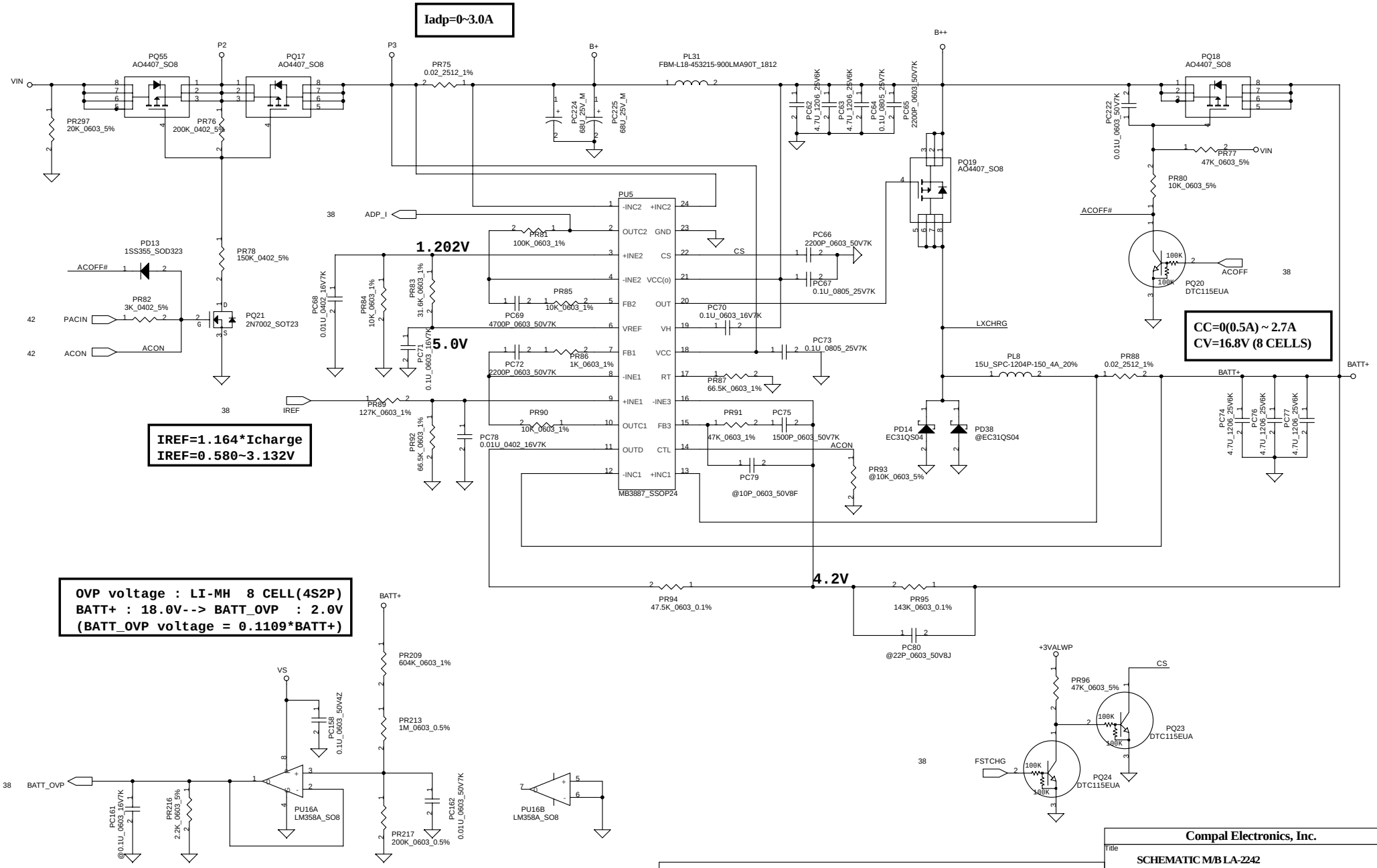

THIS SHEET OF ENGINEERING DRAWING IS THE PROPRIETARY PROPERTY OF COMPAL ELECTRONICS, INC. AND CONTAINS CONFIDENTIAL AND TRADE SECRET INFORMATION. THIS SHEET MAY NOT BE TRANSFERED FROM THE CUSTODY OF THE COMPETENT DIVISION OF R&D DEPARTMENT EXCEPT AS AUTHORIZED BY COMPAL ELECTRONICS, INC. NEITHER THIS SHEET NOR THE INFORMATION IT CONTAINS MAY BE USED BY OR DISCLOSED TO ANY THIRD PARTY WITHOUT PRIOR WRITTEN CONSENT OF COMPAL ELECTRONICS, INC.

Compal Electronics, Inc.	
Title	SCHEMATIC M/B LA-2242
Size B	Document Number
Rev	
Date: 星期一, 四月 19, 2004	Sheet 43 of 101

+3.3VALWP/+5VALWP/+12VVALWP

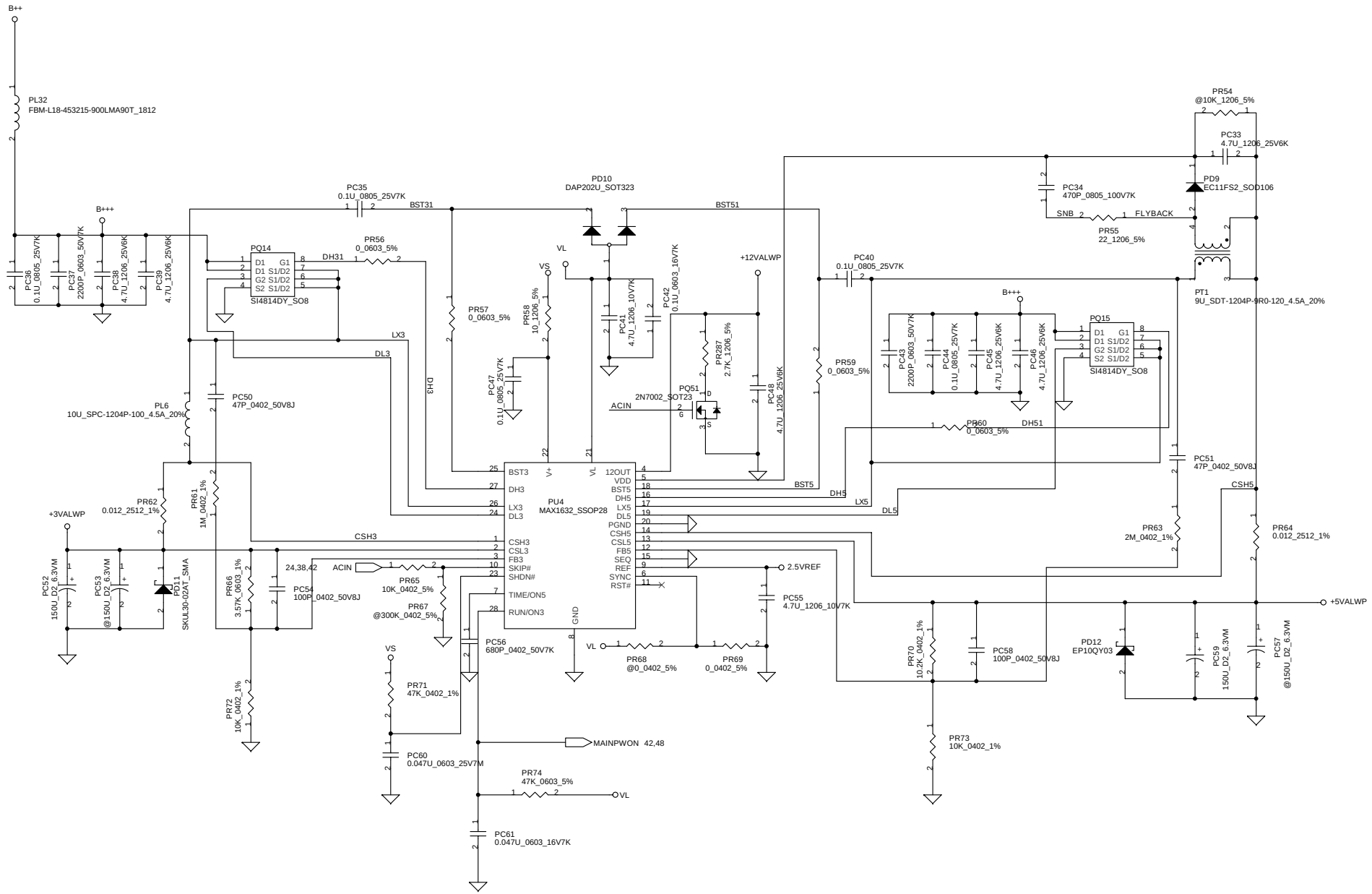

THIS SHEET OF ENGINEERING DRAWING IS THE PROPRIETARY PROPERTY OF COMPAL ELECTRONICS, INC. AND CONTAINS CONFIDENTIAL AND TRADE SECRET INFORMATION. THIS SHEET MAY NOT BE TRANSFERED FROM THE CUSTODY OF THE COMPETENT DIVISION OF R&D DEPARTMENT EXCEPT AS AUTHORIZED BY COMPAL ELECTRONICS, INC. NEITHER THIS SHEET NOR THE INFORMATION IT CONTAINS MAY BE USED BY OR DISCLOSED TO ANY THIRD PARTY WITHOUT PRIOR WRITTEN CONSENT OF COMPAL ELECTRONICS, INC.

Compal Electronics, Inc.

Title: **SCHEMATIC M/B LA-2242**

Size	Document Number	Rev
B	401289	2A

Date: 星期一, 四月 19, 2004 Sheet 44 of 101

+2.5VP/+1.2VSP/+1.35VSP

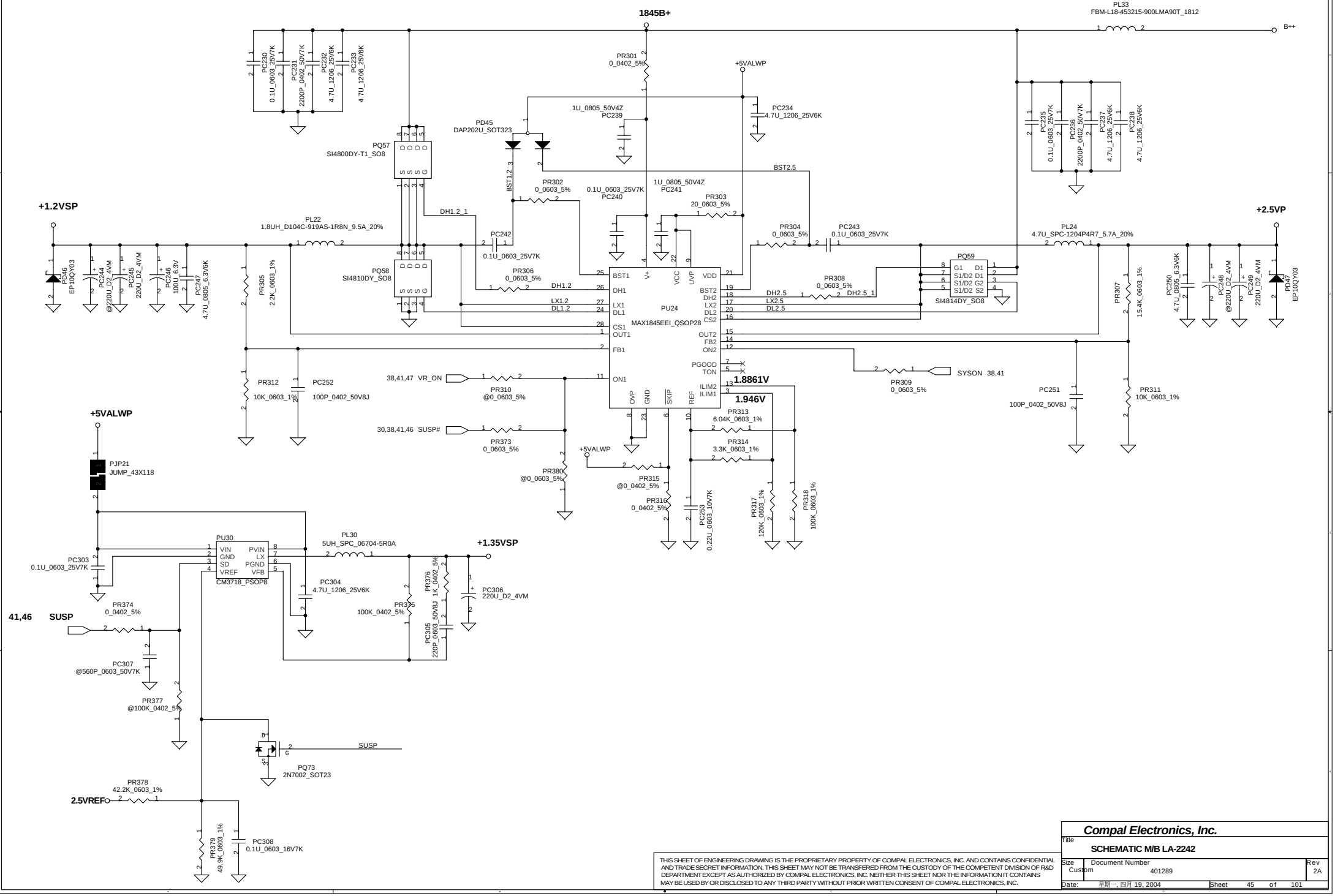

THIS SHEET OF ENGINEERING DRAWING IS THE PROPRIETARY PROPERTY OF COMPAL ELECTRONICS, INC. AND CONTAINS CONFIDENTIAL AND TRADE SECRET INFORMATION. THIS SHEET MAY NOT BE TRANSFERED FROM THE CUSTODY OF THE COMPETENT DIVISION OF R&D DEPARTMENT EXCEPT AS AUTHORIZED BY COMPAL ELECTRONICS, INC. NEITHER THIS SHEET NOR THE INFORMATION IT CONTAINS MAY BE USED BY OR DISCLOSED TO ANY THIRD PARTY WITHOUT PRIOR WRITTEN CONSENT OF COMPAL ELECTRONICS, INC.

Compal Electronics, Inc.

Title: SCHEMATIC M/B LA-2242

Size	Document Number	Rev
Custom	401289	2A

Date: 星期一, 四月 19, 2004 | Sheet 45 of 101

+1.5VALWP/+1.8VSP/+1.25VSP/+1.05VSP

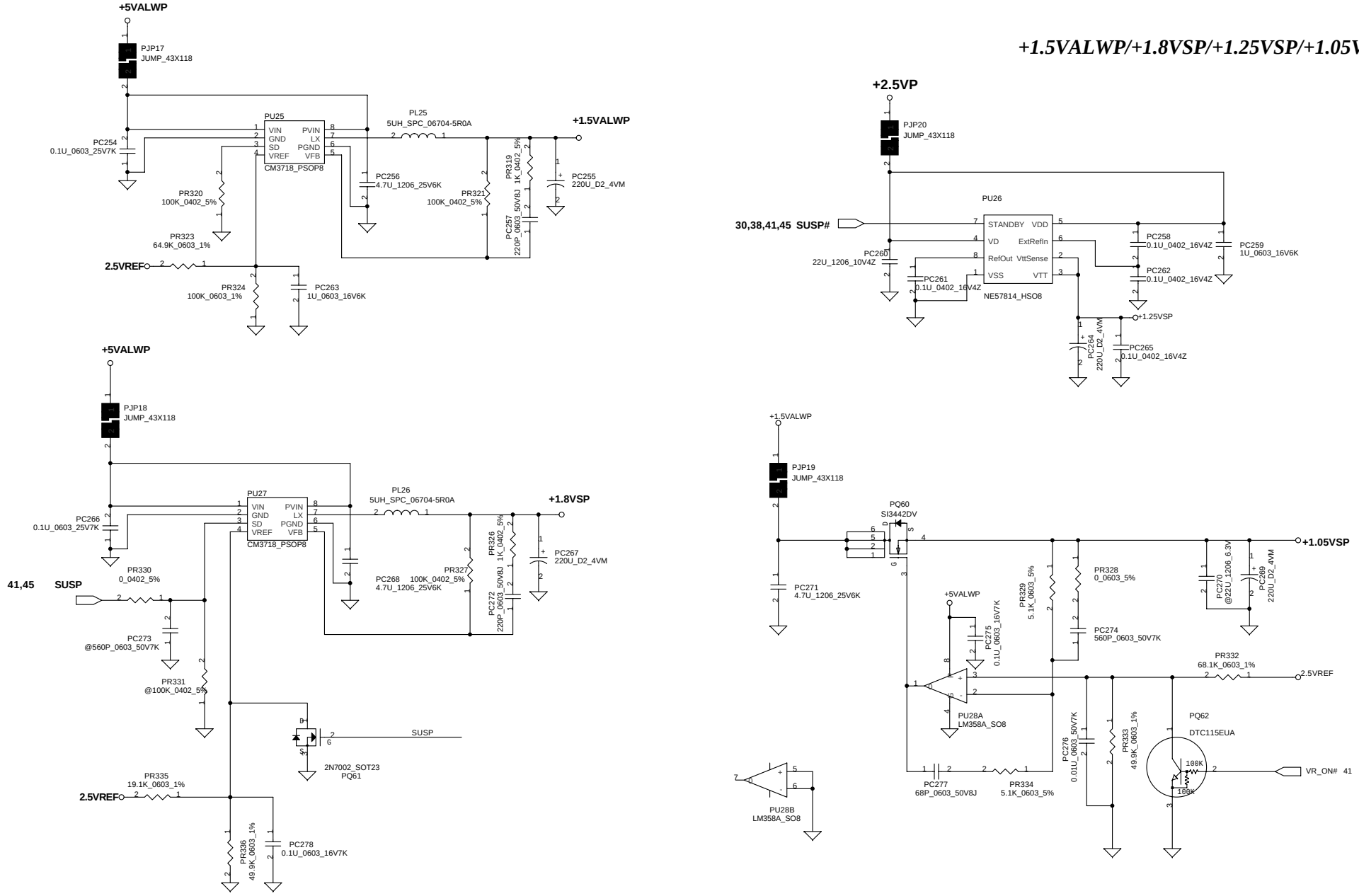

THIS SHEET OF ENGINEERING DRAWING IS THE PROPRIETARY PROPERTY OF COMPAL ELECTRONICS, INC. AND CONTAINS CONFIDENTIAL AND TRADE SECRET INFORMATION. THIS SHEET MAY NOT BE TRANSFERED FROM THE CUSTODY OF THE COMPETENT DIVISION OF R&D DEPARTMENT EXCEPT AS AUTHORIZED BY COMPAL ELECTRONICS, INC. NEITHER THIS SHEET NOR THE INFORMATION IT CONTAINS

Compal Electronics, Inc.	
Title	SCHEMATIC M/B LA-2242
Size	Document Number 401289 — Rev 2A
Date: 星期一, 四月 19, 2004	Sheet 46 of 101

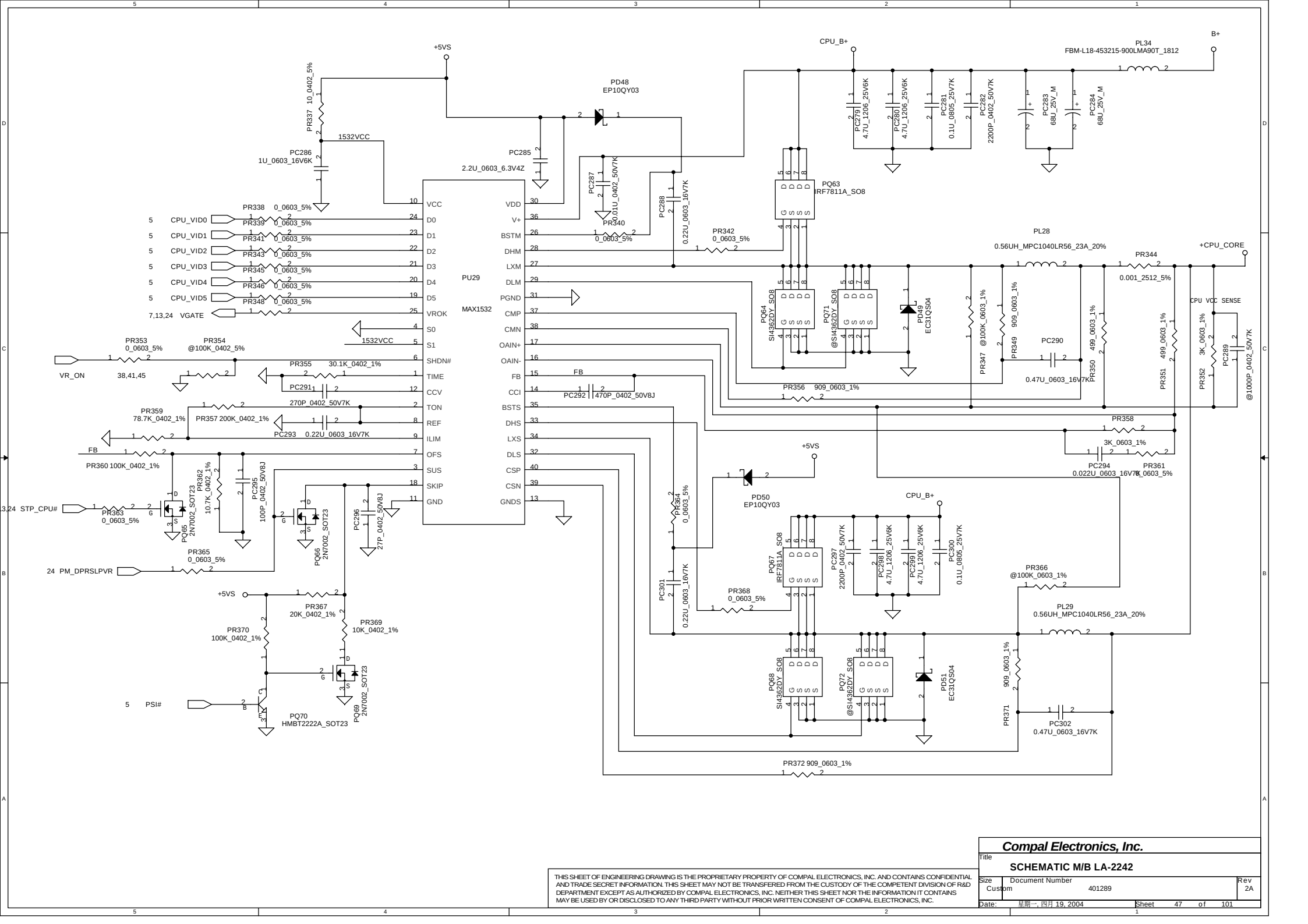

THIS SHEET OF ENGINEERING DRAWING IS THE PROPRIETARY PROPERTY OF COMPAL ELECTRONICS, INC. AND CONTAINS CONFIDENTIAL AND TRADE SECRET INFORMATION. THIS SHEET MAY NOT BE TRANSFERED FROM THE CUSTODY OF THE COMPETENT DIVISION OF R&D DEPARTMENT EXCEPT AS AUTHORIZED BY COMPAL ELECTRONICS, INC. NEITHER THIS SHEET NOR THE INFORMATION IT CONTAINS MAY BE USED BY OR DISCLOSED TO ANY THIRD PARTY WITHOUT PRIOR WRITTEN CONSENT OF COMPAL ELECTRONICS, INC.

Compal Electronics, Inc.

Title: **SCHEMATIC M/B LA-2242**

Size	Document Number	Rev
Custom	401289	2A

Date: 星期一, 四月 19, 2004 Sheet 47 of 101

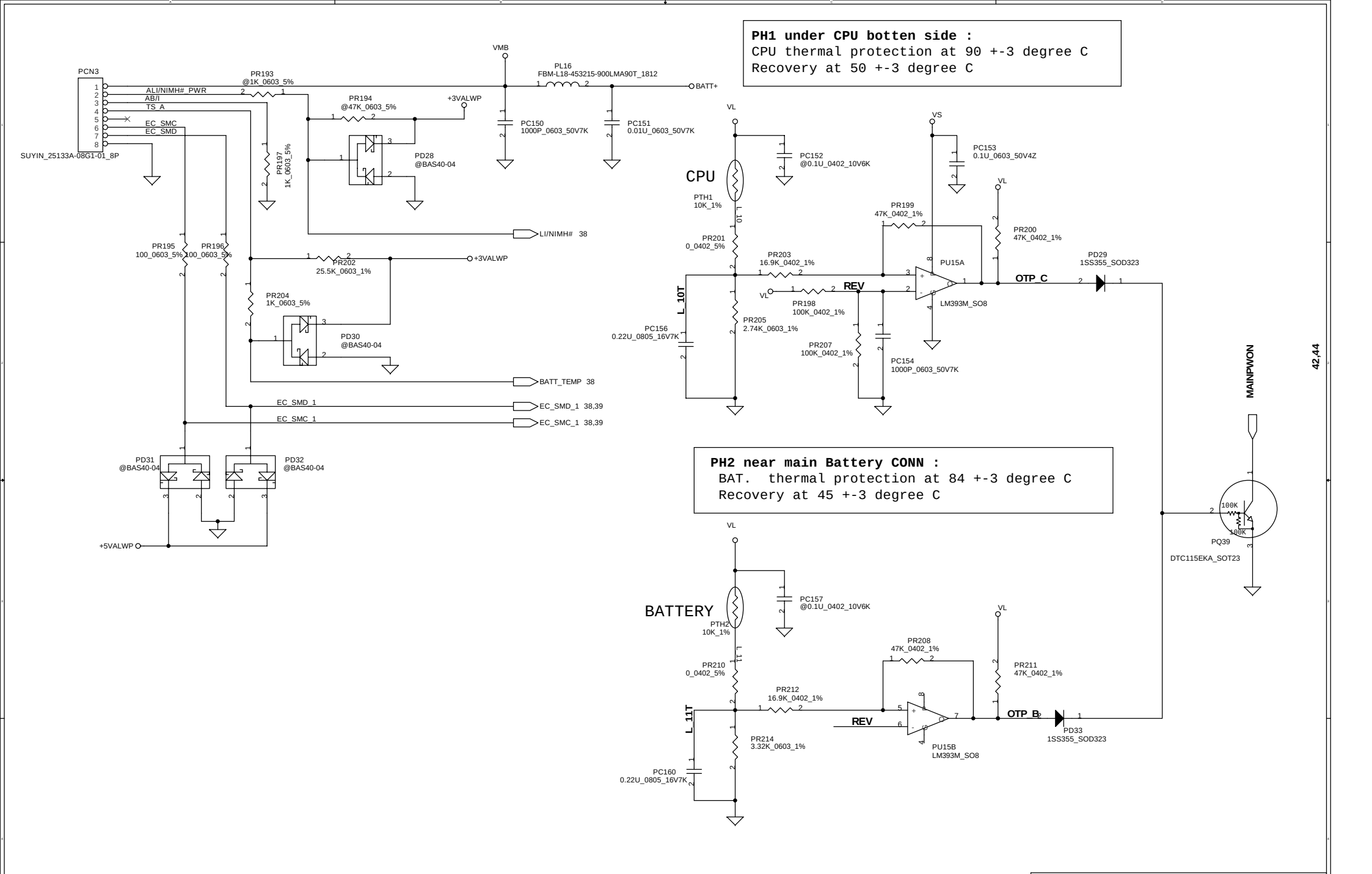

THIS SHEET OF ENGINEERING DRAWING IS THE PROPRIETARY PROPERTY OF COMPAL ELECTRONICS, INC. AND CONTAINS CONFIDENTIAL AND TRADE SECRET INFORMATION. THIS SHEET MAY NOT BE TRANSFERED FROM THE CUSTODY OF THE COMPETENT DIVISION OF R&D DEPARTMENT EXCEPT AS AUTHORIZED BY COMPAL ELECTRONICS, INC. NEITHER THIS SHEET NOR THE INFORMATION IT CONTAINS MAY BE USED BY OR DISCLOSED TO ANY THIRD PARTY WITHOUT PRIOR WRITTEN CONSENT OF COMPAL ELECTRONICS, INC.

Compal Electronics, Inc.

Title: **SCHEMATIC M/B LA-2242**

Size	Document Number	Rev
B	401289	2A

Date: 星期一, 四月 19, 2004 | Sheet 48 of 101

Version change list (P.I.R. List)

Power section

Item	Reason for change	PG#	Modify List	Date	B.Ver#
1	1.05V oscillate	46	Delete PC270 and add PC269 (220u D2).	2004.02.07	
2	The single "SUSP" will be pull down to 2.2V	45 46	Delete PR331 and PR377.	2004.02.07	
3	To reduce the response time, when charger into CP mode.	43	Change PR81 from 22K to 100K.	2004.02.07	
4	For EMI request	43;44;45;47	Delete PL5,PL7,PL23,PL27 Change PQ63 and PQ67 to IRF7821 Change PR340 and PR364 to 2.2 ohm	2004.02.11	
5	To speed up 1.8V, 1.35V 1nd 1.05V	45 46	Change PR336, PR333 and PR379 to 49.9K Change PC278 and PC308 to 0.1uF Change PR335 to 19.1K Change PR332 to 68.1K Change PR378 to 42.2K	2004.02.12	
6	To reduce +3VALWP power plane negative voltage	44	Change PD11 to SKUL30-02AT	2004.03.01	
7	For EMI request	43;44;45;47	Add PL31,PL32,PL33,PL34 Change PR342 and PR368 to 2.2 ohm Change PR340 and PR364 to 0 ohm	2004.03.01	
8	For EMI request	47	Change PR342 and PR368 to 0 ohm Change PQ63 and PQ67 to IRF7811A Change PQ64 and PQ68 to SI4362	2004.03.16	
9	Adjust Vin detector	42	Change PR167 to 100K_0603_0.1% Change PR172 to 24K_0603_0.1% Change PR170 to 22K_0603_1% Change PR166 to 1M_0402_1%	2004.03.16	

THIS SHEET OF ENGINEERING DRAWING IS THE PROPRIETARY PROPERTY OF COMPAL ELECTRONICS, INC. AND CONTAINS CONFIDENTIAL AND TRADE SECRET INFORMATION. THIS SHEET MAY NOT BE TRANSFERED FROM THE CUSTODY OF THE COMPETENT DIVISION OF R&D DEPARTMENT EXCEPT AS AUTHORIZED BY COMPAL ELECTRONICS, INC. NEITHER THIS SHEET NOR THE INFORMATION IT CONTAINS MAY BE USED BY OR DISCLOSED TO ANY THIRD PARTY WITHOUT PRIOR WRITTEN CONSENT OF COMPAL ELECTRONICS, INC.

Version change list (P.I.R. List) HW section Page 1 of 1

Item	Reason for change	PG#	Modify List	Date	
1	PCI_AD[31..0],PCI_CBE#[0..3] reserved	P.27	Correct PCI_AD[31..0],PCI_CBE#[0..3]	2/4	EVT(Rev02)
2	VR_ON# pull up resistor	P.41	Change R254 from 100K to 10K	2/4	EVT(Rev02)
3	AGP Isolating circuit	P.7	Mount U39, unmount R372,R377,R388,R414	2/4	EVT(Rev02)
4	Change Codec to ALC250	P.39	Change U26 to ACL250, mount R242	2/4	EVT(Rev02)
5	Modify VGA strap pin	P.14	Mount R479,R489; unmount R437, R441,R443,R448	2/4	EVT(Rev02)
6	Enter Windows "Beep" noise	P.39	Del C209 and let U26 pin14,15,16 no connect	2/6	DVT(Rev03)
7	For LS-1993 NBA_PLUG signal	P.37	Del R541,Q31	2/6	DVT(Rev03)
8	For DFX	P.24,36,38	Change J1,J2,H22 footprint	2/6	DVT(Rev03)
9	Change USB Power Switch to RT9701CBL	P.34	Change U34,U35, Del R291,R292,R313,R322,R329 Add R557,R558,R559,R560,R562,C685,C686	2/8	DVT(Rev03)
10	Change LAN LED circuit	P.27	Add R562	2/8	DVT(Rev03)
11	For EMI	P.13,16,17 ,23,35,37	Del L15,L16,L31,L28,L23,R542,R543,R283,R284,R471	2/11	DVT(Rev03)
12	Unpoped 0.1UF capacitor for EMI request	P.12,16,17, 26,27,29,30	Del some 0.1UF capacitor for EMI request	2/12	DVT(Rev03)
13	For +LVDDR25 ripple	P.16	Unpoped C518 for LDO issue	3/4	PVT(Rev04)
14	Duplicate AGP_BUSY pill-up	P.24	Del R103	3/4	PVT(Rev04)
15	For BCM5788 +3V_LAN 0.2V leakage issue	P.27	Change VESD[1..3] to +3V_LAN(system power)	3/4	PVT(Rev04)
16	For BCM5788/BCM4401 difference	P.27,28	Del R369 and change T1 to 24ST0023-3 when use BCM4401	3/4	PVT(Rev04)
17	Vishay FIR issue(Nokia 61XX series)	P.32,33	Change U31 to TDFU6102; Poped R97 and change to 10K	3/4	PVT(Rev04)
18	For audio issue	P.35,40	Add Q33,Q34 and EC_MUTE to U17 pin.69 Connect BYPASS from U30 to U29, change R274 to 39K Connect EAPD to EC pin.29	3/4	PVT(Rev04)
19	To simplify Codec circuit	P.36	Unpoped C210,C252, Del Y5,R236,C192,C193 Add C690,C691	3/4	PVT(Rev04)
20	For EMI	P.37	Add C688,CP11,CP12	3/4	PVT(Rev04)

THIS SHEET OF ENGINEERING DRAWING IS THE PROPRIETARY PROPERTY OF COMPAL ELECTRONICS, INC. AND CONTAINS CONFIDENTIAL AND TRADE SECRET INFORMATION. THIS SHEET MAY NOT BE TRANSFERED FROM THE CUSTODY OF THE COMPETENT DIVISION OF R&D DEPARTMENT EXCEPT AS AUTHORIZED BY COMPAL ELECTRONICS, INC. NEITHER THIS SHEET NOR THE INFORMATION IT CONTAINS MAY BE USED BY OR DISCLOSED TO ANY THIRD PARTY WITHOUT PRIOR WRITTEN CONSENT OF COMPAL ELECTRONICS, INC.

Compal Confidential

DFL32 Schematics Document

Banias/Dothan uFCPGA with Intel 855GME + ICH4-M

2003-04-06

REV:2.0

THIS SHEET OF ENGINEERING DRAWING IS THE PROPRIETARY PROPERTY OF COMPAL ELECTRONICS, INC. AND CONTAINS CONFIDENTIAL AND TRADE SECRET INFORMATION. THIS SHEET MAY NOT BE TRANSFERED FROM THE CUSTODY OF THE COMPETENT DIVISION OF R&D DEPARTMENT EXCEPT AS AUTHORIZED BY COMPAL ELECTRONICS, INC. NEITHER THIS SHEET NOR THE INFORMATION IT CONTAINS

Compal Electronics, Inc.		
Title	SCHEMATIC M/B LA-2242	
Size	Document Number 401289	Rev 2A
Date: 星期一, 四月 19, 2004	Sheet 51 of 101	

Compal Confidential

Model Name : DFL32
File Name : LA-2242

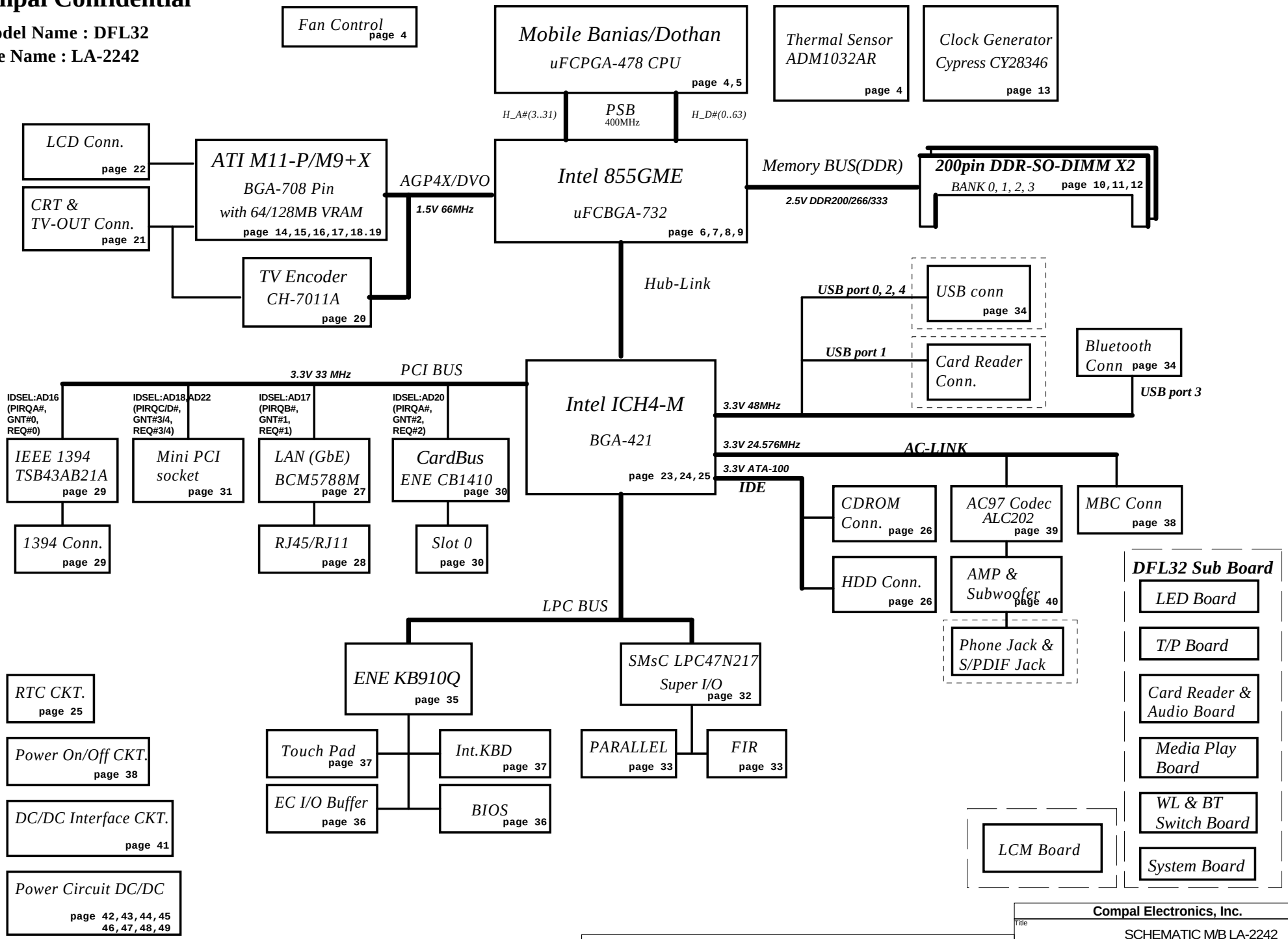

THIS SHEET OF ENGINEERING DRAWING IS THE PROPRIETARY PROPERTY OF COMPAL ELECTRONICS, INC. AND CONTAINS CONFIDENTIAL AND TRADE SECRET INFORMATION. THIS SHEET MAY NOT BE TRANSFERED FROM THE CUSTODY OF THE COMPETENT DIVISION OF R&D DEPARTMENT EXCEPT AS AUTHORIZED BY COMPAL ELECTRONICS, INC. NEITHER THIS SHEET NOR THE INFORMATION IT CONTAINS MAY BE USED BY OR DISCLOSED TO ANY THIRD PARTY WITHOUT PRIOR WRITTEN CONSENT OF COMPAL ELECTRONICS, INC.

Compal Electronics, Inc.	
Title	SCHEMATIC M/B LA-2242
Size	Document Number 401289 — Rev 2A
Date: 星期一, 四月 19, 2004	Sheet 52 of 101

Voltage Rails

Power Plane	Description	S0-S1	S3	S5
VIN	Adapter power supply (19V)	N/A	N/A	N/A
B+	AC or battery power rail for power circuit	N/A	N/A	N/A
+CPU_CORE	Core voltage for CPU	ON	OFF	OFF
+VCCP	1.05V rail for Processor I/O	ON	OFF	OFF
+1.25VS	1.25V switched power rail for DDR Vtt	ON	OFF	OFF
+1.2VS	1.2V switched power rail for VGA core power	ON	OFF	OFF
+1.35VS	1.35V switched power rail for GMCH core power	ON	OFF	OFF
+1.5VALW	1.5V always on power rail	ON	ON	ON*
+1.5VS	1.5V switched power rail for AGP interface	ON	OFF	OFF
+1.8VS	1.8V switched power rail for CPU PLL & Hub-Link	ON	OFF	OFF
+2.5V	2.5V power rail for system DDR	ON	ON	OFF
+2.5VS	2.5V switched power rail	ON	OFF	OFF
+3VALW	3.3V always on power rail	ON	ON	ON*
+3V	3.3V switched power rail	ON	ON	OFF
+3VS	3.3V switched power rail	ON	OFF	OFF
+5VALW	5V always on power rail	ON	ON	ON*
+5VS	5V switched power rail	ON	OFF	OFF
+12VALW	12V always on power rail	ON	ON	ON*
RTCVCC	RTC power	ON	ON	ON

Note : ON* means that this power plane is ON only with AC power available, otherwise it is OFF.

Symbol note:

:means digital ground.

:means analog ground.

@ :means reserved.

AS2010,AS2020 Compare Table

Item	* AS2020	AS2010(ATI)	AS2010(UMA)	Page
VGA	ATI M11P	ATI M11P	UMA	7, 9, 14, 15, 16, 17, 21, 22, 38
VRAM	128MB	64MB	N/A	14, 18, 19
TV Encoder	N/A	N/A	CH7011A	20
LAN	BCM5788M(GbE)	BCM4401(10/100)	BCM4401(10/100)	27, 28
S/PDIF	YES	N/A	N/A	N/A
Card Reader	YES	YES	N/A	N/A
Sub Woofer	YES	YES	N/A	33
LCM/B	YES	N/A	N/A	37, 39
MEDIA/B	YES	N/A	N/A	40

Board ID/ Project ID Table for AD channel

Vcc	3.3V +/- 5%
Ra	10K +/- 5%

BID/PID	Rb/Rc	V_{AD_BID} min	V_{AD_BID} typ	V_{AD_BID} max
0	0	0 V	0 V	0 V
1	8.2K +/- 5%	1.412 V	1.486 V	1.560 V
2	18K +/- 5%	2.015 V	2.121 V	2.227 V
3	33K +/- 5%	2.406 V	2.533 V	2.659 V
4	56K +/- 5%	2.660 V	2.800 V	2.940 V
5	NC	3.135 V	3.300 V	3.465 V

Board ID	PCB Revision
0	0.1
1	0.2
2	0.3
* 3	0.4
4	
5	
6	
7	

Project ID	Project
* 0	Drongo2(M11)
1	Drongo3(M11)
2	Drongo4
3	Drongo3(M9+X)
4	
5	
6	
7	

Internal PCI Devices

DEVICE	PCI Device ID
HUB	D30
USB	D29
AC97 MODEM	D31
AC97	D31
ATA 100	D31
ETHERNET	D8 (AD24)
LPC I/F	D31
SMBUS	D31

I2C / SMBUS ADDRESSING

DEVICE	HEX	ADDRESS
DDR SO-DIMM 0	A0	1010000X
DDR SO-DIMM 1	A2	1010001X
CLOCK GENERATOR (EXT.)	D2	1101001X

External PCI Devices

DEVICE	PCI Device ID	IDSEL #	REQ/GNT #	PIRQ
1394	D0	AD16	0	E
LAN	D1	AD17	1	F
CARD BUS	D4	AD20	2	A
Wireless LAN	D2	AD18	3	G
Mini-PCI	D6	AD22	4	H
AGP BUS	N/A	AGP_DEVSEL#	N/A	A

THIS SHEET OF ENGINEERING DRAWING IS THE PROPRIETARY PROPERTY OF COMPAL ELECTRONICS, INC. AND CONTAINS CONFIDENTIAL AND TRADE SECRET INFORMATION. THIS SHEET MAY NOT BE TRANSFERED FROM THE CUSTODY OF THE COMPETENT DIVISION OF R&D DEPARTMENT EXCEPT AS AUTHORIZED BY COMPAL ELECTRONICS, INC. NEITHER THIS SHEET NOR THE INFORMATION IT CONTAINS MAY BE USED BY OR DISCLOSED TO ANY THIRD PARTY WITHOUT PRIOR WRITTEN CONSENT OF COMPAL ELECTRONICS, INC.

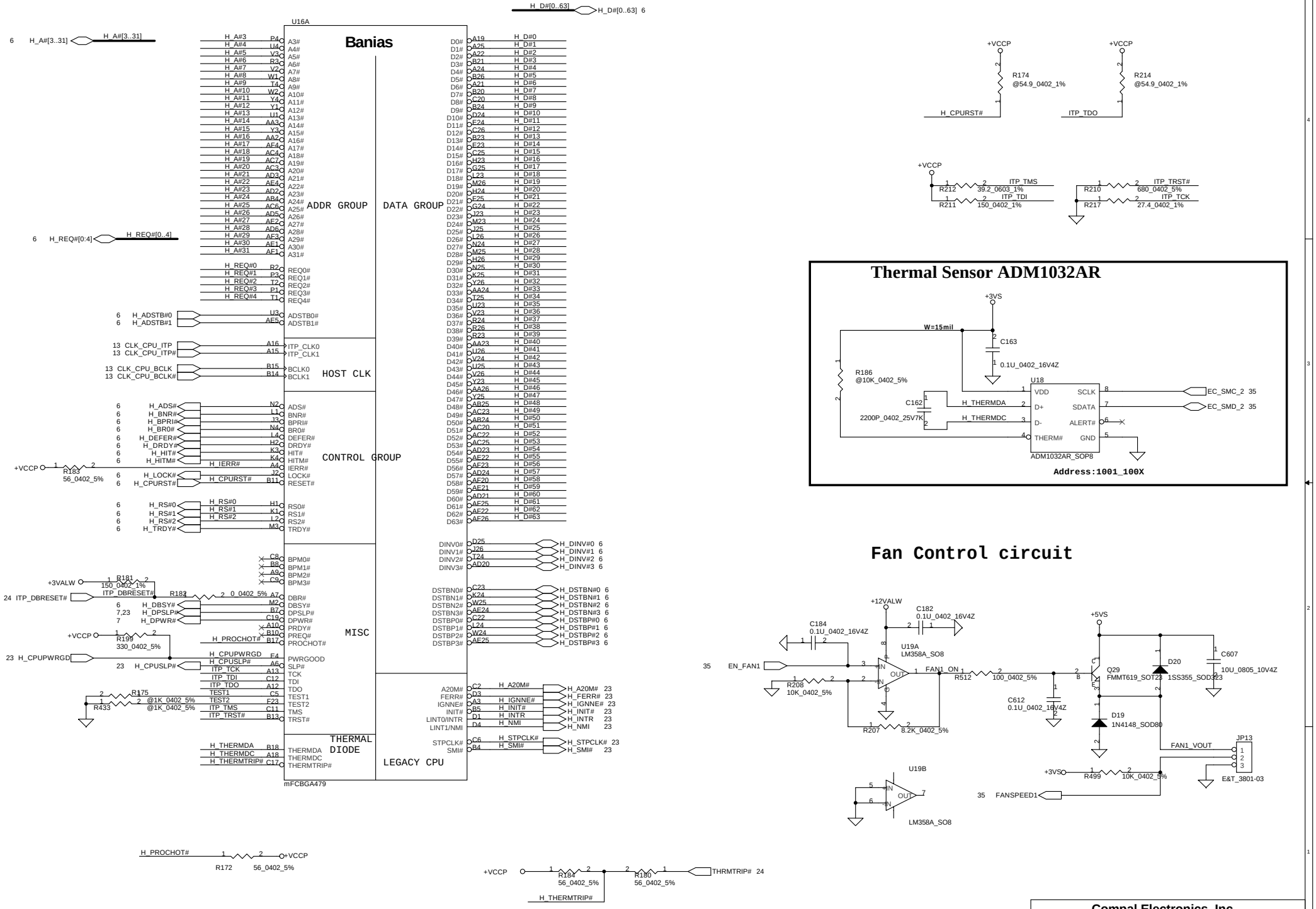

THIS SHEET OF ENGINEERING DRAWING IS THE PROPRIETARY PROPERTY OF COMPAL ELECTRONICS, INC. AND CONTAINS CONFIDENTIAL AND TRADE SECRET INFORMATION. THIS SHEET MAY NOT BE TRANSFERED FROM THE CUSTODY OF THE COMPETENT DIVISION OF R&D DEPARTMENT EXCEPT AS AUTHORIZED BY COMPAL ELECTRONICS, INC. NEITHER THIS SHEET NOR THE INFORMATION IT CONTAINS MAY BE USED BY OR DISCLOSED TO ANY THIRD PARTY WITHOUT PRIOR WRITTEN CONSENT OF COMPAL ELECTRONICS, INC.

Compal Electronics, Inc.	
Title	SCHEMATIC M/B LA-2242
Size	Document Number: 401289 — Rev 2A
Date: 星期一, 四月 19, 2004	Sheet 54 of 101

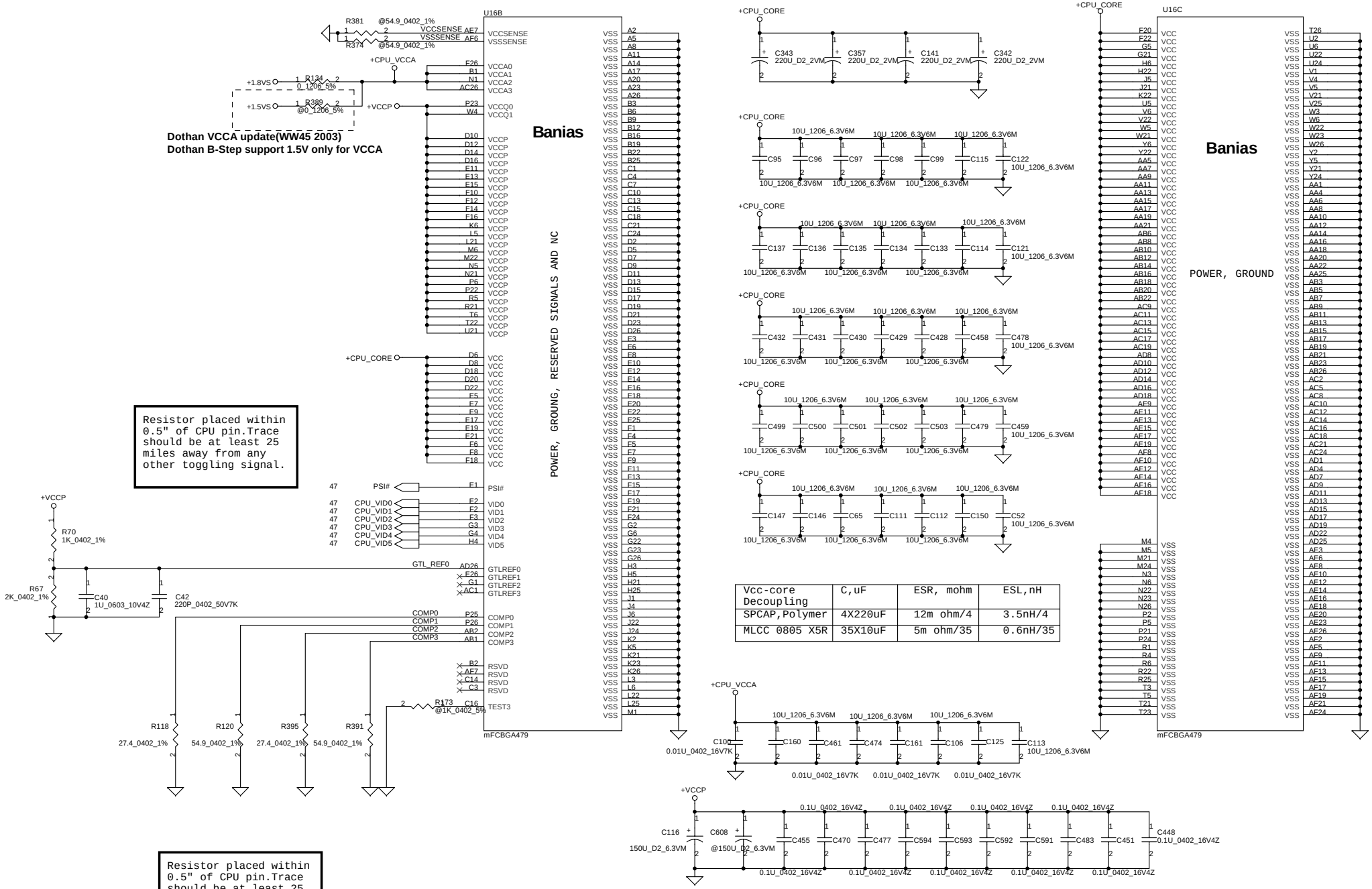

Vcc-core Decoupling	C,uF	ESR, mohm	ESL,nH
SPCAP,Polymer	4X220uF	12m ohm/4	3.5nH/4
MLCC 0805 X5R	35X10uF	5m ohm/35	0.6nH/35

THIS SHEET OF ENGINEERING DRAWING IS THE PROPRIETARY PROPERTY OF COMPAL ELECTRONICS, INC. AND CONTAINS CONFIDENTIAL AND TRADE SECRET INFORMATION. THIS SHEET MAY NOT BE TRANSFERED FROM THE CUSTODY OF THE COMPETENT DIVISION OF R&D DEPARTMENT EXCEPT AS AUTHORIZED BY COMPAL ELECTRONICS, INC. NEITHER THIS SHEET NOR THE INFORMATION IT CONTAINS MAY BE USED BY OR DISCLOSED TO ANY THIRD PARTY WITHOUT PRIOR WRITTEN CONSENT OF COMPAL ELECTRONICS, INC.

Compal Electronics, Inc.

Title: SCHEMATIC M/B LA-2242

Size | Document Number: 401289 | Rev 2A

Date: 星期一, 四月 19, 2004 | Sheet 55 of 101

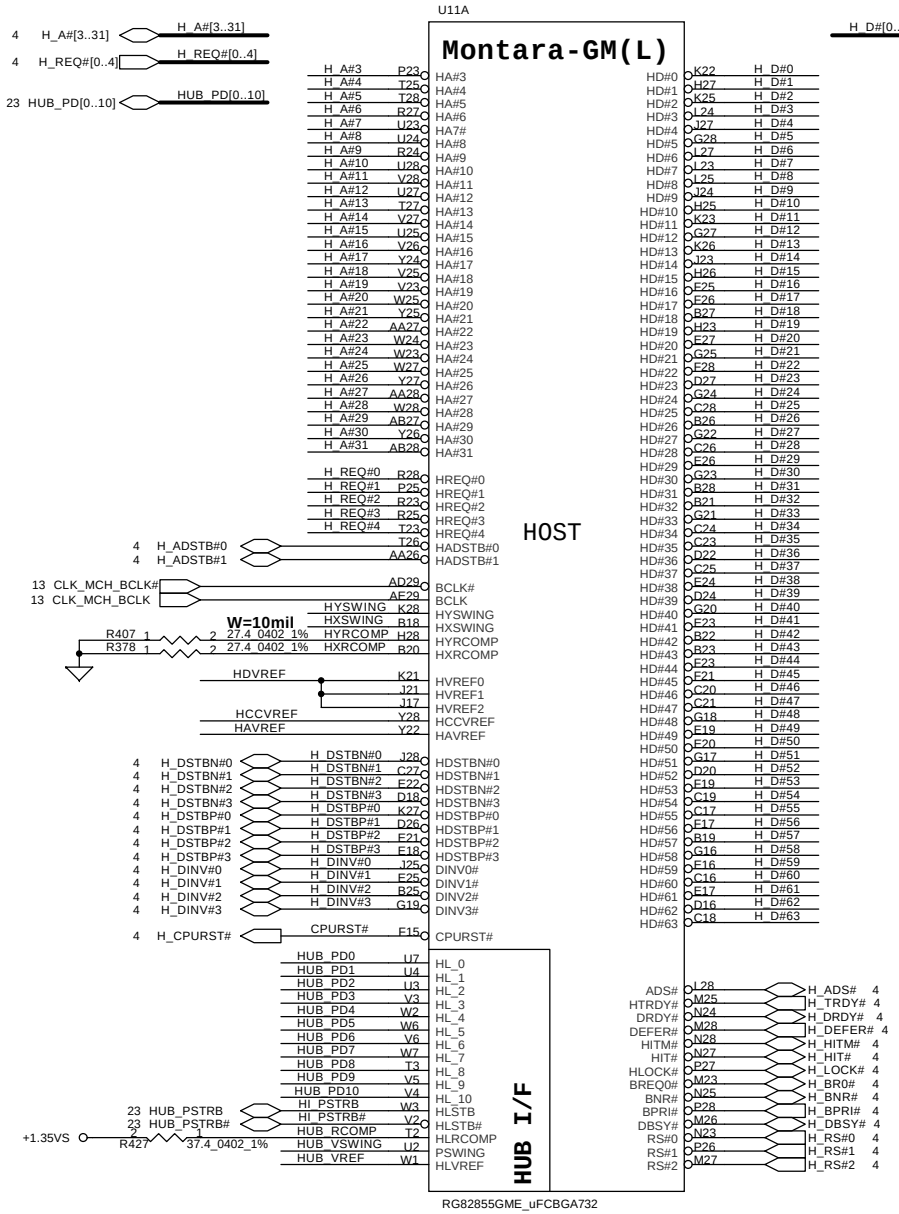

HOST REF VOLTAGE

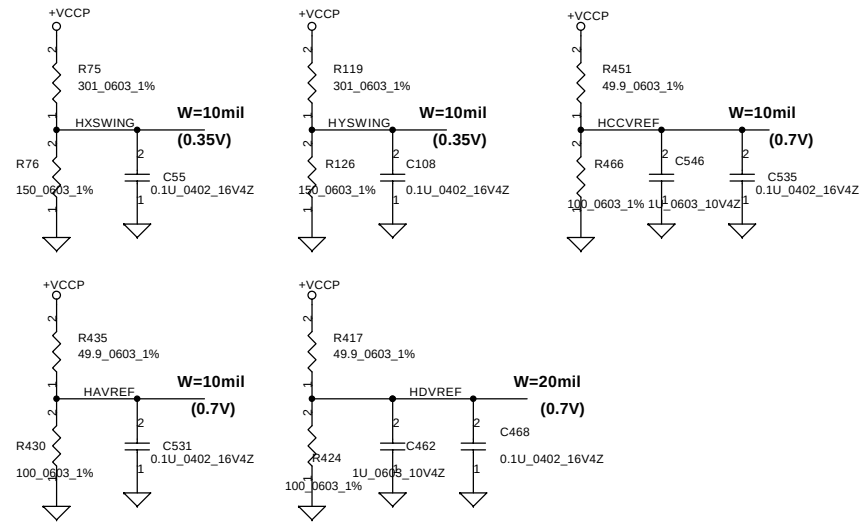

HUB I/F REF VOLTAGE

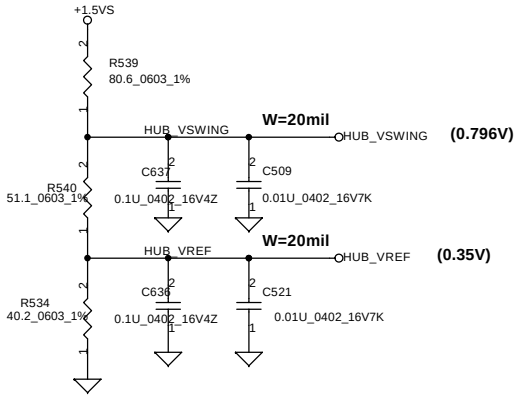

THIS SHEET OF ENGINEERING DRAWING IS THE PROPRIETARY PROPERTY OF COMPAL ELECTRONICS, INC. AND CONTAINS CONFIDENTIAL AND TRADE SECRET INFORMATION. THIS SHEET MAY NOT BE TRANSFERED FROM THE CUSTODY OF THE COMPETENT DIVISION OF R&D DEPARTMENT EXCEPT AS AUTHORIZED BY COMPAL ELECTRONICS, INC. NEITHER THIS SHEET NOR THE INFORMATION IT CONTAINS MAY BE USED BY OR DISCLOSED TO ANY THIRD PARTY WITHOUT PRIOR WRITTEN CONSENT OF COMPAL ELECTRONICS, INC.

Compal Electronics, Inc.	
Title	SCHEMATIC M/B LA-2242
Size	Document Number 401289
Rev	2A
Date:	星期一, 四月 19, 2004
Sheet	56 of 101

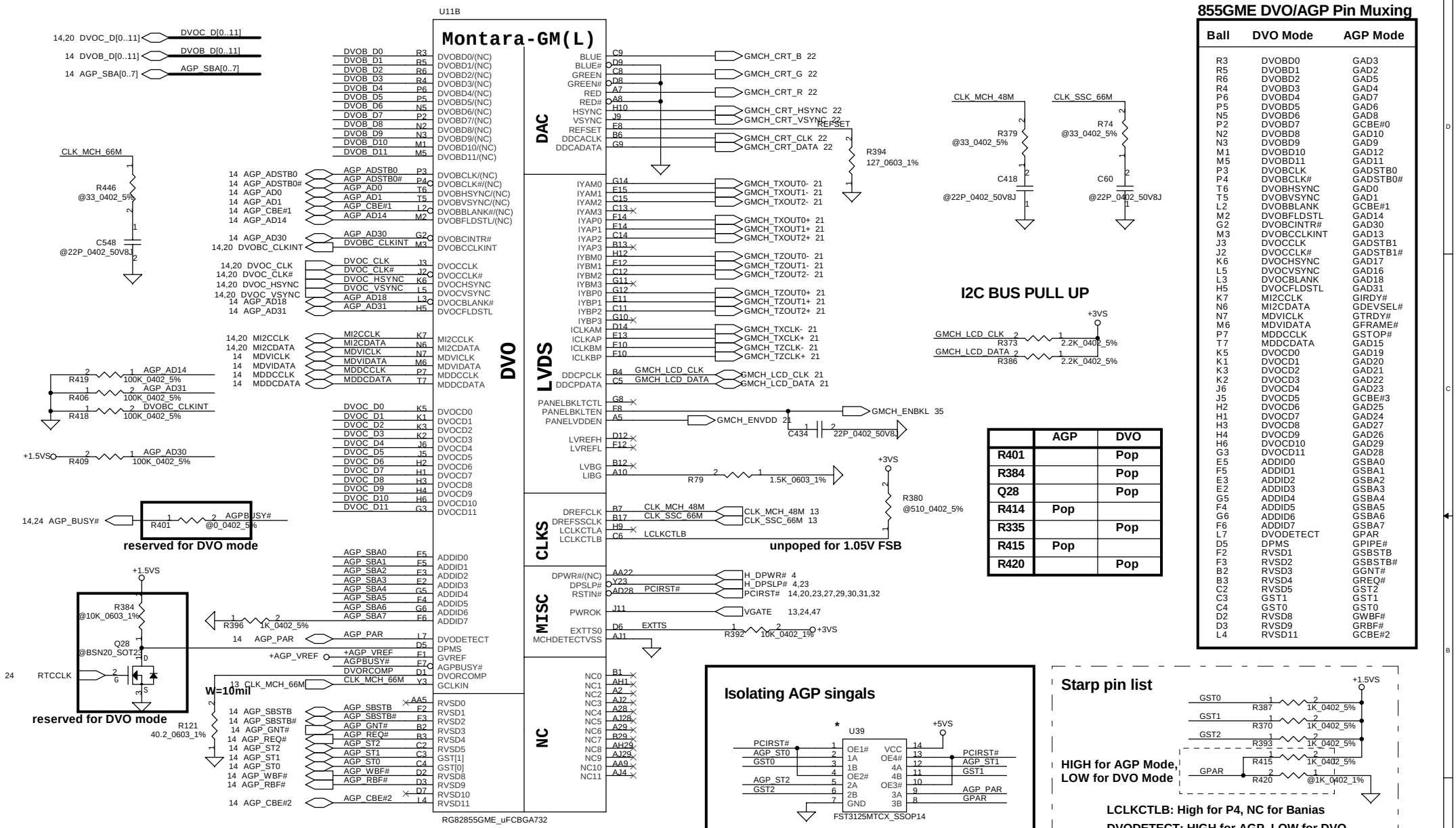

855GME DVO/AGP Pin Muxing

Ball	DVO Mode	AGP Mode
R3	DVOBD0	GAD3
R5	DVOBD1	GAD2
R6	DVOBD2	GAD5
R4	DVOBD3	GAD4
P6	DVOBD4	GAD7
P5	DVOBD5	GAD6
N5	DVOBD6	GAD8
P2	DVOBD7	GCBE#0
N2	DVOBD8	GAD10
N3	DVOBD9	GAD9
M1	DVOBD10	GAD12
M5	DVOBD11	GAD11
P3	DVOBCLK	GADSTB0
P4	DVOBCLK#	GADSTB0#
T6	DVOBHSYNC	GAD0
T5	DVOBVSYNC	GAD1
L2	DVOBBLANK	GCBE#1
M2	DVOBFLDSTL	GAD14
G2	DVOBCINTR#	GAD30
M3	DVOBCCLKINT	GAD13
J3	DVOCCLK	GADSTB1
J2	DVOCCLK#	GADSTB1#
K6	DVOCHSYNC	GAD17
L5	DVOCVSYNC	GAD16
L3	DVOCBLANK	GAD18
H5	DVOCFLDSTL	GAD31
K7	MI2CCLK	GIRDY#
N6	MI2CDATA	GDEVSEL#
N7	MDVICLK	GTRDY#
M6	MDVIDATA	GFRAME#
P7	MDDCCLK	GSTOP#
T7	MDDCDATA	GAD15
K5	DVOCD0	GAD19
K1	DVOCD1	GAD20
K3	DVOCD2	GAD21
K2	DVOCD3	GAD22
J6	DVOCD4	GAD23
J5	DVOCD5	GCBE#3
H2	DVOCD6	GAD25
H1	DVOCD7	GAD24
H3	DVOCD8	GAD27
H4	DVOCD9	GAD26
H6	DVOCD10	GAD29
G3	DVOCD11	GAD28
E5	ADDID0	GSBA0
F5	ADDID1	GSBA1
E3	ADDID2	GSBA2
E2	ADDID3	GSBA3
G5	ADDID4	GSBA4
F4	ADDID5	GSBA5
G6	ADDID6	GSBA6
F6	ADDID7	GSBA7
L7	DVODETECT	GPAR
D5	DPMS	GPIPE#
F2	RVSD1	GSBSTB
F3	RVSD2	GSBSTB#
B2	RVSD3	GGNT#
B3	RVSD4	GREQ#
C2	RVSD5	GST2
C3	GST1	GST1
C4	GST0	GST0
D2	RVSD8	GWBF#
D3	RVSD9	GRBF#
L4	RVSD11	GCBE#2

	AGP	DVO
R401		Pop
R384		Pop
Q28		Pop
R414	Pop	
R335		Pop
R415	Pop	
R420		Pop

LCLKCTLB: High for P4, NC for Banias

DVODETECT: HIGH for AGP, LOW for DVO

ST2	ST1	ST0	PSB/Mem/GFX
0	0	0	400 / 266 / 200
0	0	1	400 / 200 / 200
0	1	0	400 / 200 / 133
1	1	1	400 / 333 / 250 *

THIS SHEET OF ENGINEERING DRAWING IS THE PROPRIETARY PROPERTY OF COMPAL ELECTRONICS, INC. AND CONTAINS CONFIDENTIAL AND TRADE SECRET INFORMATION. THIS SHEET MAY NOT BE TRANSFERED FROM THE CUSTODY OF THE COMPETENT DIVISION OF R&D DEPARTMENT EXCEPT AS AUTHORIZED BY COMPAL ELECTRONICS, INC. NEITHER THIS SHEET NOR THE INFORMATION IT CONTAINS MAY BE USED BY OR DISCLOSED TO ANY THIRD PARTY WITHOUT PRIOR WRITTEN CONSENT OF COMPAL ELECTRONICS, INC.

Compal Electronics, Inc.

Title: SCHEMATIC M/B LA-2242

Size | Document Number: 401289 | Rev: 2A

Date: 星期一, 四月 19, 2004 | Sheet 57 of 101

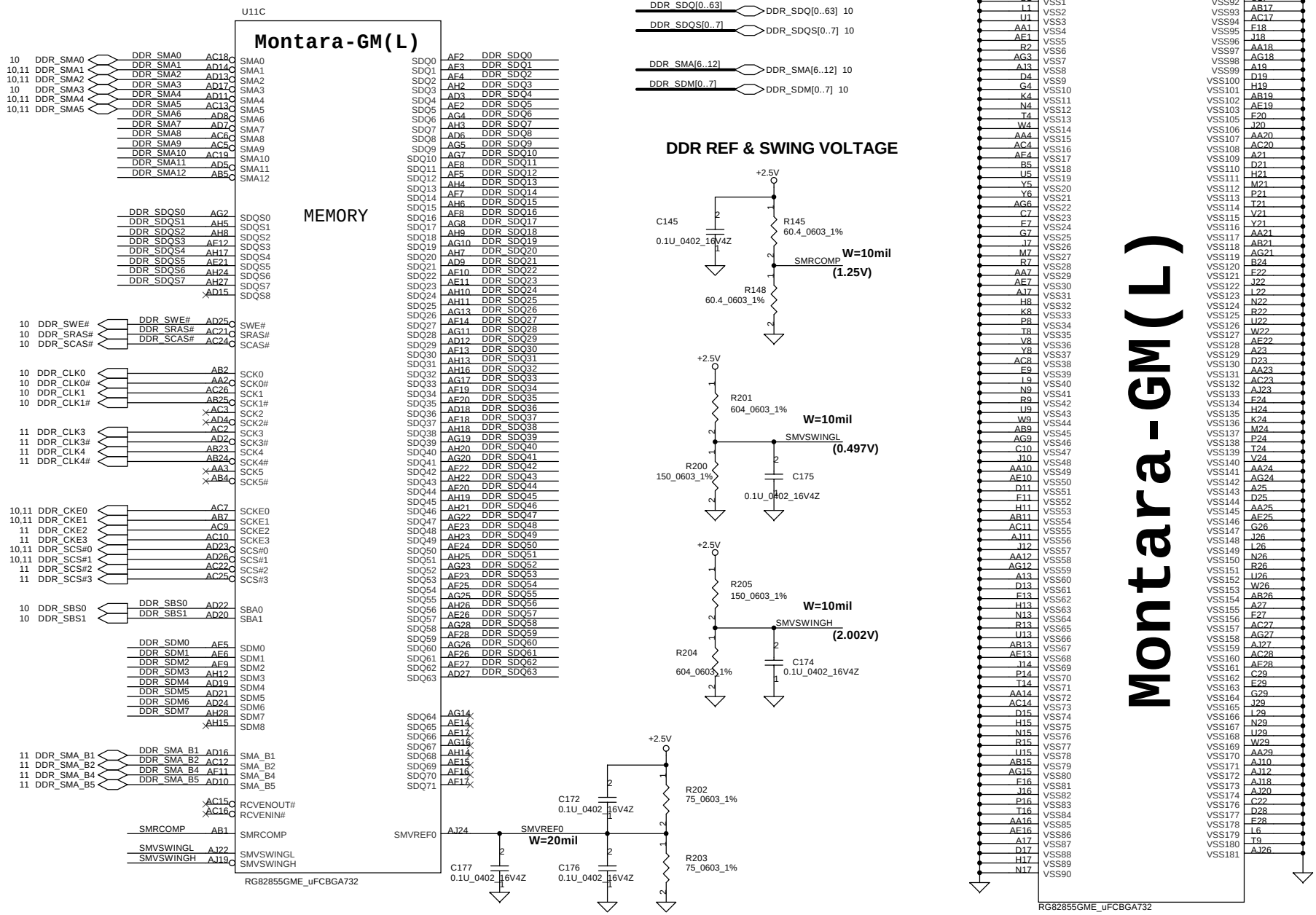

THIS SHEET OF ENGINEERING DRAWING IS THE PROPRIETARY PROPERTY OF COMPAL ELECTRONICS, INC. AND CONTAINS CONFIDENTIAL AND TRADE SECRET INFORMATION. THIS SHEET MAY NOT BE TRANSFERED FROM THE CUSTODY OF THE COMPETENT DIVISION OF R&D DEPARTMENT EXCEPT AS AUTHORIZED BY COMPAL ELECTRONICS, INC. NEITHER THIS SHEET NOR THE INFORMATION IT CONTAINS MAY BE USED BY OR DISCLOSED TO ANY THIRD PARTY WITHOUT PRIOR WRITTEN CONSENT OF COMPAL ELECTRONICS, INC.

Compal Electronics, Inc.	
Title	SCHEMATIC M/B LA-2242
Size	Document Number 401289
Rev	2A
Date:	星期一, 四月 19, 2004
Sheet	58 of 101

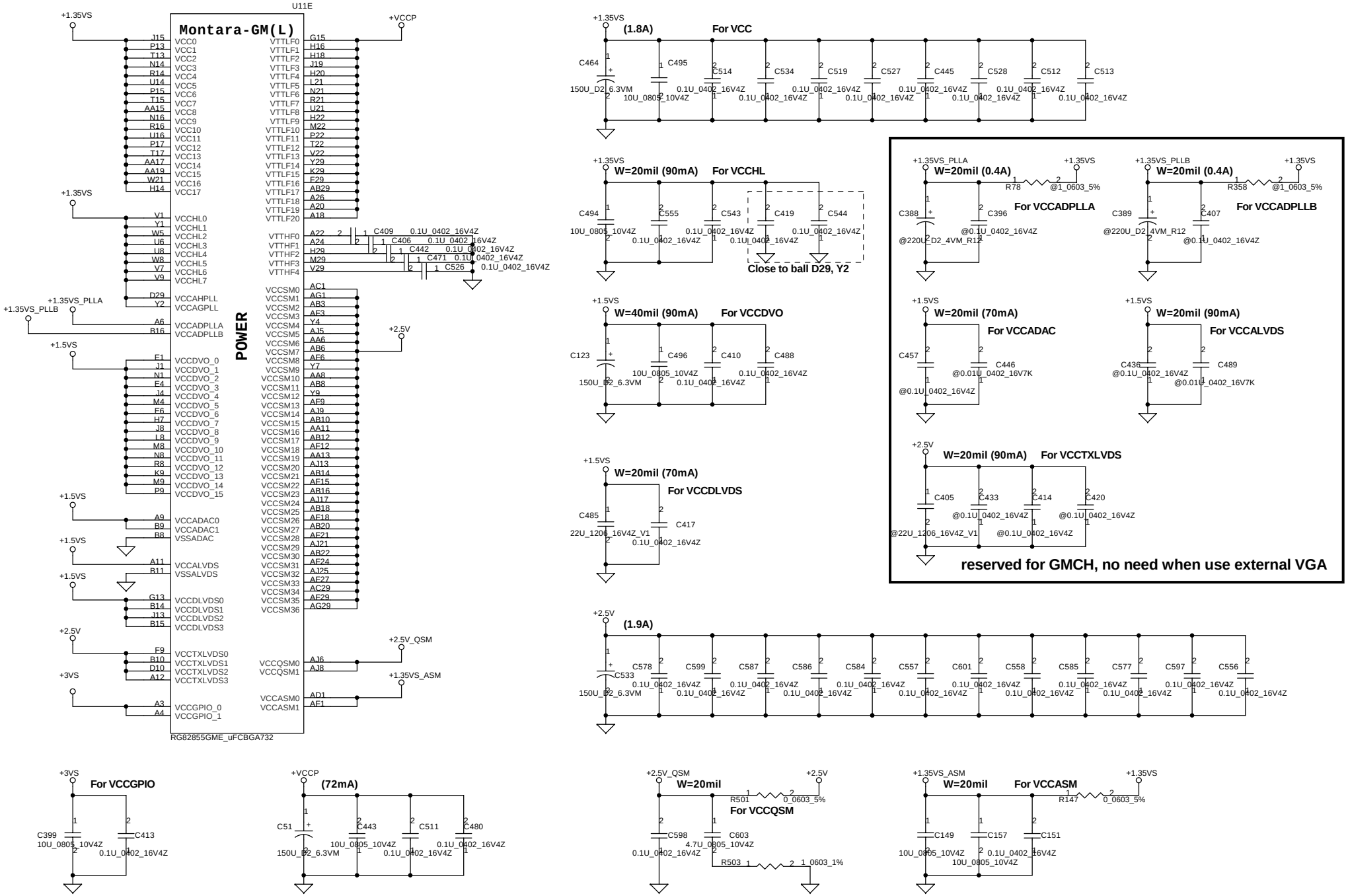

THIS SHEET OF ENGINEERING DRAWING IS THE PROPRIETARY PROPERTY OF COMPAL ELECTRONICS, INC. AND CONTAINS CONFIDENTIAL AND TRADE SECRET INFORMATION. THIS SHEET MAY NOT BE TRANSFERED FROM THE CUSTODY OF THE COMPETENT DIVISION OF R&D DEPARTMENT EXCEPT AS AUTHORIZED BY COMPAL ELECTRONICS, INC. NEITHER THIS SHEET NOR THE INFORMATION IT CONTAINS MAY BE USED BY OR DISCLOSED TO ANY THIRD PARTY WITHOUT PRIOR WRITTEN CONSENT OF COMPAL ELECTRONICS, INC.

Compal Electronics, Inc.

Title	SCHEMATIC M/B LA-2242	
Size	Document Number 401289	Rev 2A
Date: 星期一, 四月 19, 2004	Sheet 59 of 101	

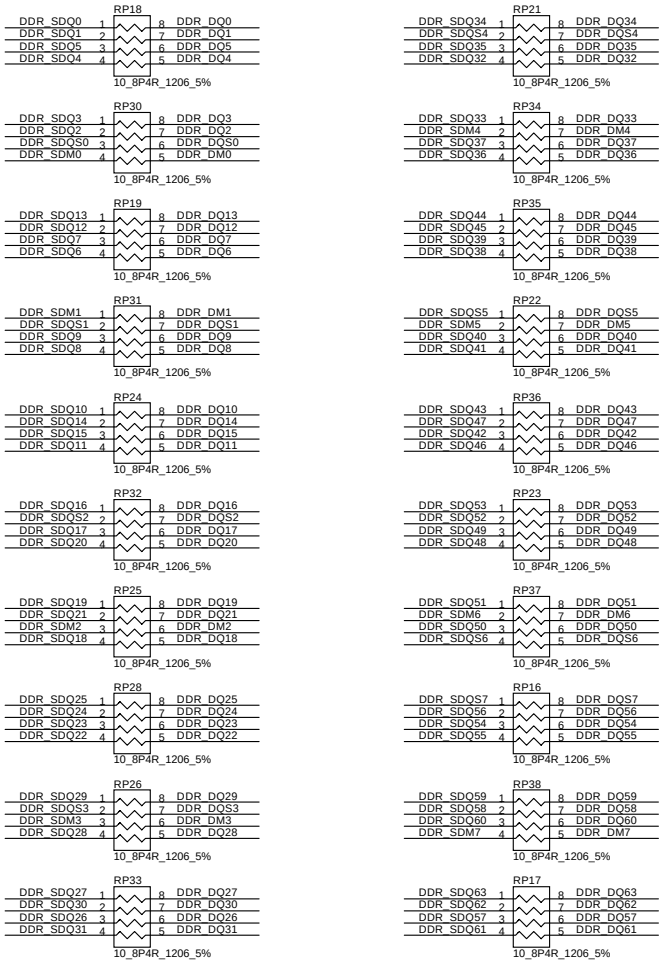

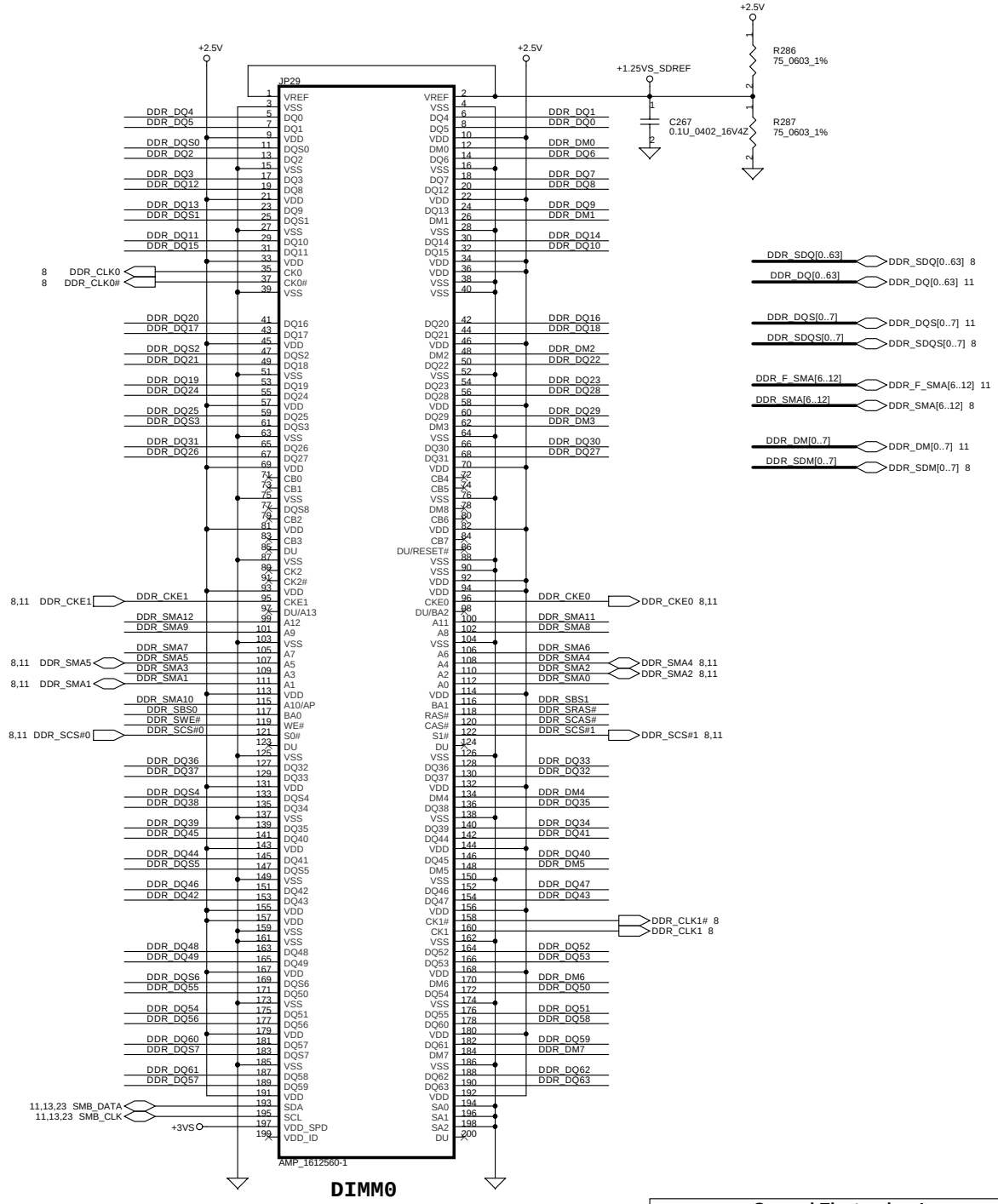

THIS SHEET OF ENGINEERING DRAWING IS THE PROPRIETARY PROPERTY OF COMPAL ELECTRONICS, INC. AND CONTAINS CONFIDENTIAL AND TRADE SECRET INFORMATION. THIS SHEET MAY NOT BE TRANSFERED FROM THE CUSTODY OF THE COMPETENT DIVISION OF R&D DEPARTMENT EXCEPT AS AUTHORIZED BY COMPAL ELECTRONICS, INC. NEITHER THIS SHEET NOR THE INFORMATION IT CONTAINS MAY BE USED BY OR DISCLOSED TO ANY THIRD PARTY WITHOUT PRIOR WRITTEN CONSENT OF COMPAL ELECTRONICS, INC.

Compal Electronics, Inc.

Title: SCHEMATIC M/B LA-2242

Size | Document Number: 401289 | Rev: 2A

Date: 星期一, 四月 19, 2004 | Sheet 60 of 101

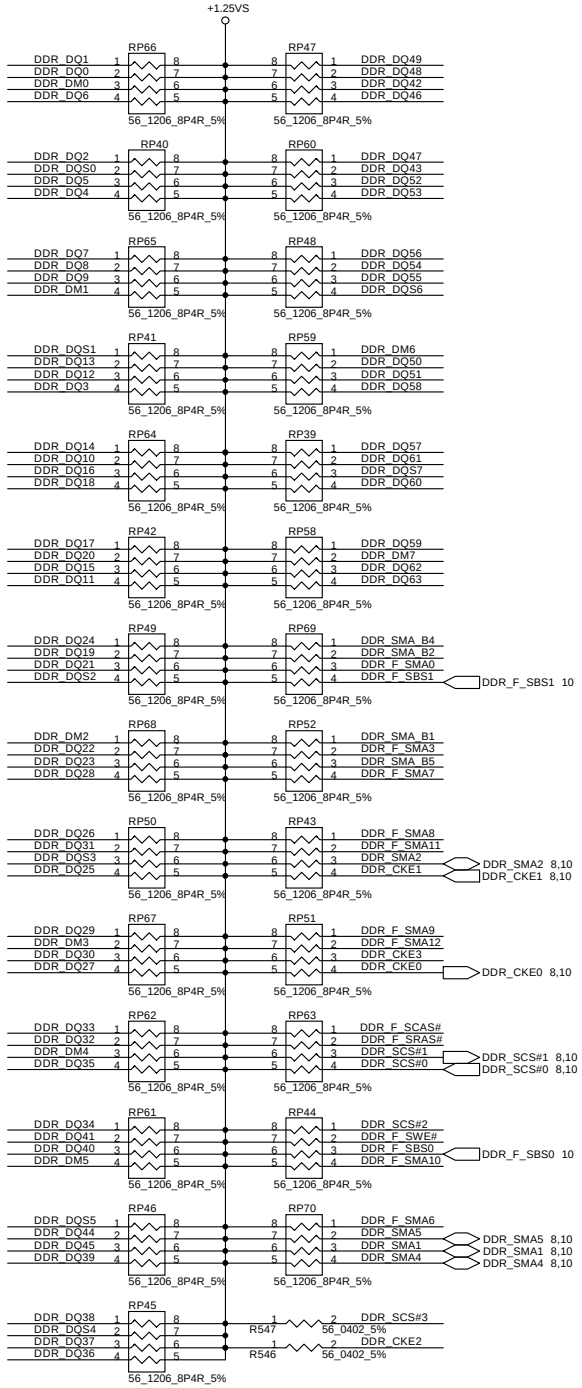

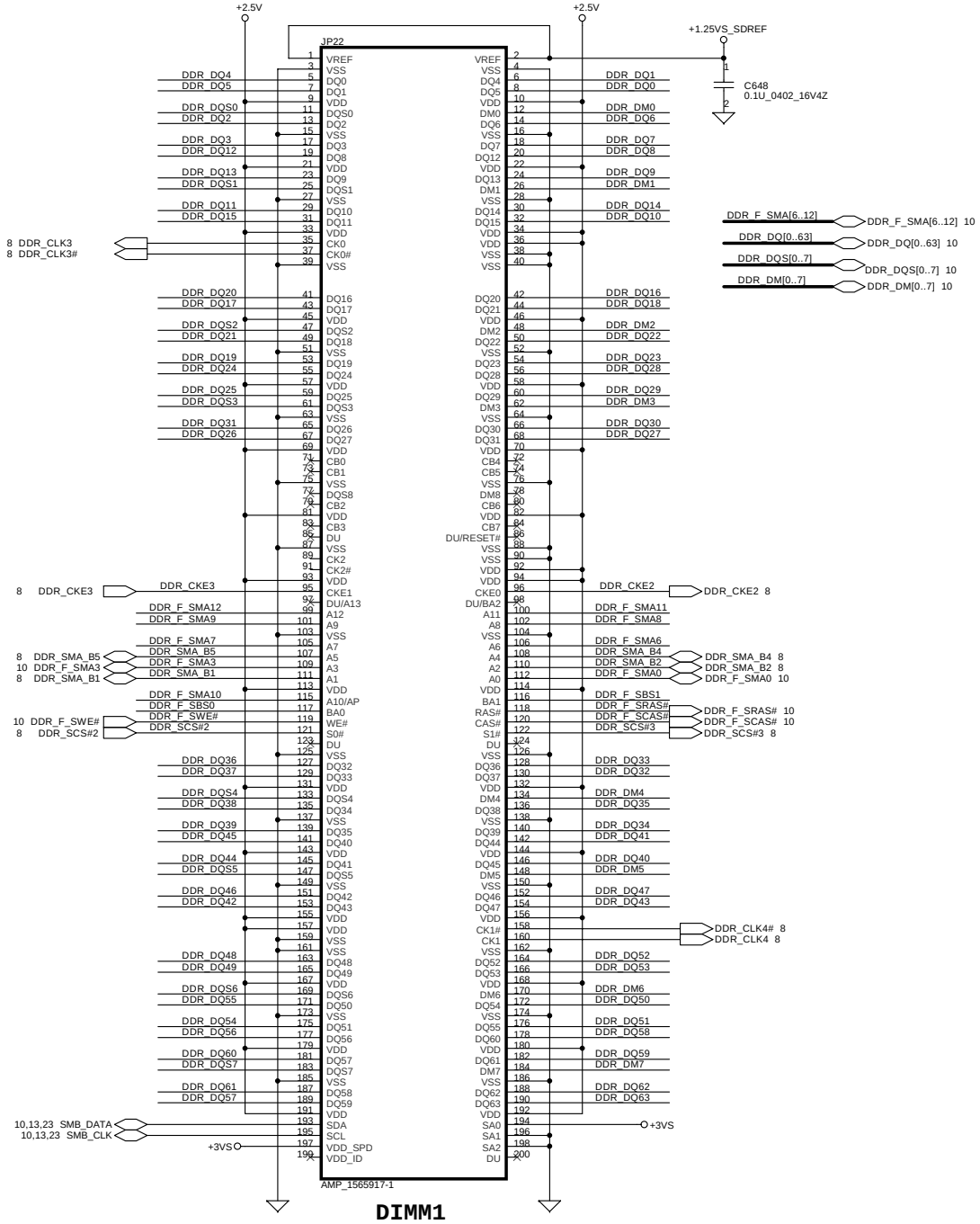

THIS SHEET OF ENGINEERING DRAWING IS THE PROPRIETARY PROPERTY OF COMPAL ELECTRONICS, INC. AND CONTAINS CONFIDENTIAL AND TRADE SECRET INFORMATION. THIS SHEET MAY NOT BE TRANSFERED FROM THE CUSTODY OF THE COMPETENT DIVISION OF R&D DEPARTMENT EXCEPT AS AUTHORIZED BY COMPAL ELECTRONICS, INC. NEITHER THIS SHEET NOR THE INFORMATION IT CONTAINS MAY BE USED BY OR DISCLOSED TO ANY THIRD PARTY WITHOUT PRIOR WRITTEN CONSENT OF COMPAL ELECTRONICS, INC.

Compal Electronics, Inc.

Title: SCHEMATIC M/B LA-2242

Size | Document Number: 401289 | Rev: 2A

Date: 星期一, 四月 19, 2004 | Sheet 61 of 101

Layout note :

Distribute as close as possible to DDR-SODIMM.

Unpoped for EMI request

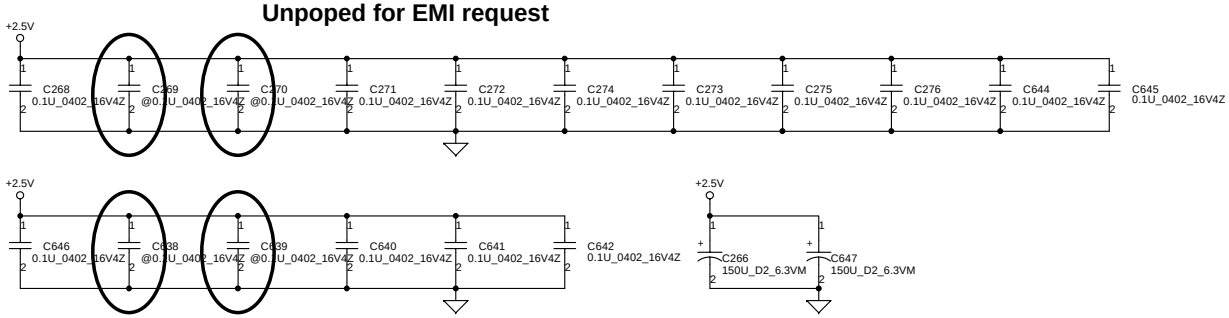

Layout note :

Place one cap close to every 2 pull up resistors termination to +1.25V

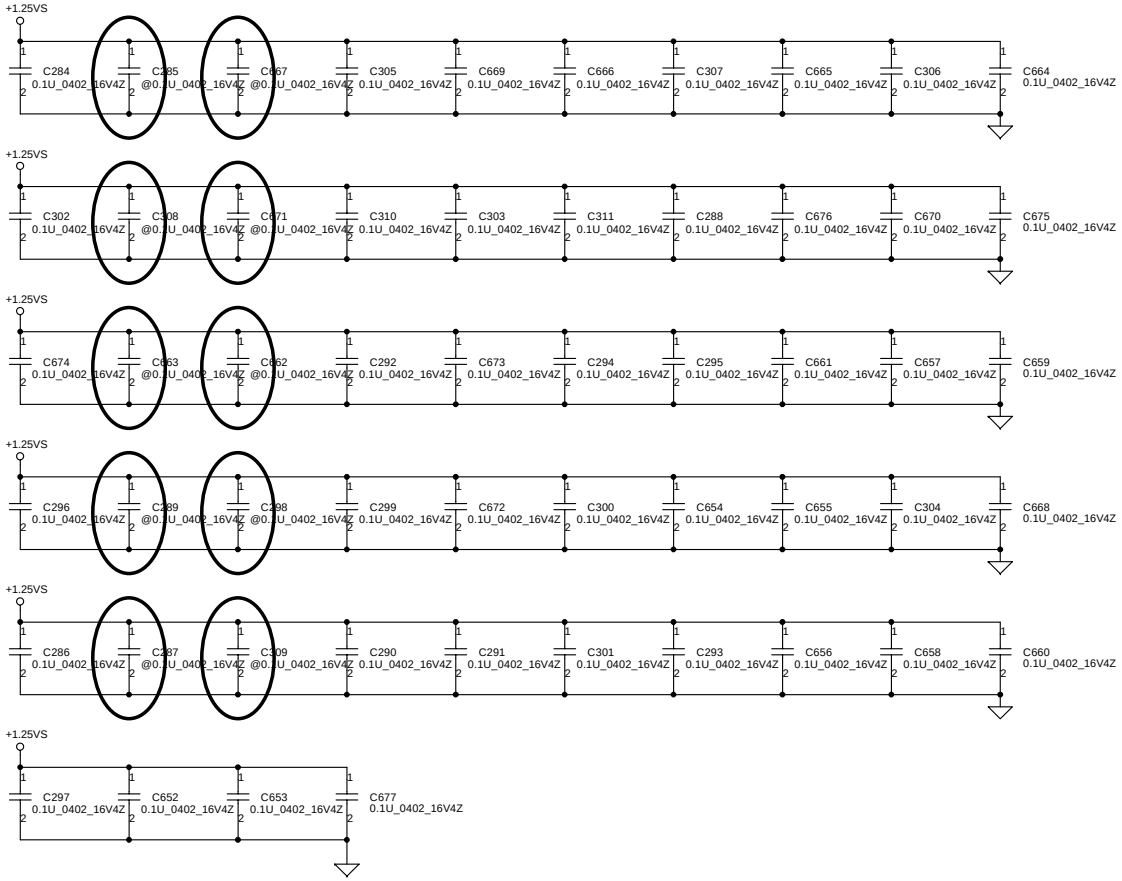

THIS SHEET OF ENGINEERING DRAWING IS THE PROPRIETARY PROPERTY OF COMPAL ELECTRONICS, INC. AND CONTAINS CONFIDENTIAL AND TRADE SECRET INFORMATION. THIS SHEET MAY NOT BE TRANSFERED FROM THE CUSTODY OF THE COMPETENT DIVISION OF R&D DEPARTMENT EXCEPT AS AUTHORIZED BY COMPAL ELECTRONICS, INC. NEITHER THIS SHEET NOR THE INFORMATION IT CONTAINS MAY BE USED BY OR DISCLOSED TO ANY THIRD PARTY WITHOUT PRIOR WRITTEN CONSENT OF COMPAL ELECTRONICS, INC.

Compal Electronics, Inc.	
Title	SCHEMATIC M/B LA-2242
Size	Document Number 401289
Rev	2A
Date:	星期一, 四月 19, 2004
Sheet	62 of 101

Clock Generator

SEL2	SEL1	SEL0	CPUCLKC[0..2]	CPUCLKT[0..2]
0	0	0	166.67	166.67
0	**0**	**1**	**100.00**	**100.00**
0	1	0	200.00	200.00
0	1	1	133.33	133.33

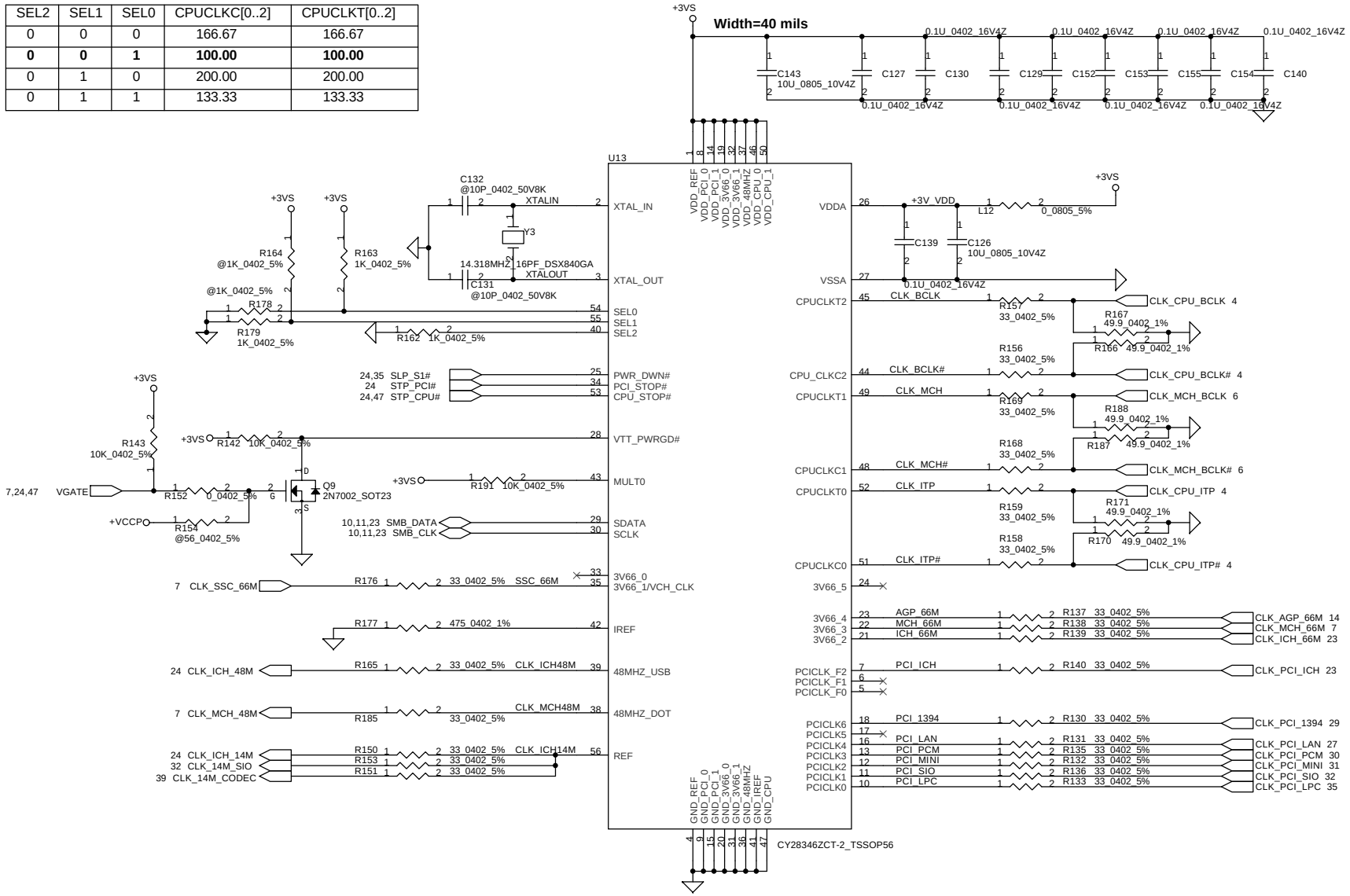

THIS SHEET OF ENGINEERING DRAWING IS THE PROPRIETARY PROPERTY OF COMPAL ELECTRONICS, INC. AND CONTAINS CONFIDENTIAL AND TRADE SECRET INFORMATION. THIS SHEET MAY NOT BE TRANSFERED FROM THE CUSTODY OF THE COMPETENT DIVISION OF R&D DEPARTMENT EXCEPT AS AUTHORIZED BY COMPAL ELECTRONICS, INC. NEITHER THIS SHEET NOR THE INFORMATION IT CONTAINS MAY BE USED BY OR DISCLOSED TO ANY THIRD PARTY WITHOUT PRIOR WRITTEN CONSENT OF COMPAL ELECTRONICS, INC.

Compal Electronics, Inc.

Title: SCHEMATIC M/B LA-2242

Size | Document Number: 401289 | Rev: 2A

Date: 星期一, 四月 19, 2004 | Sheet 63 of 101

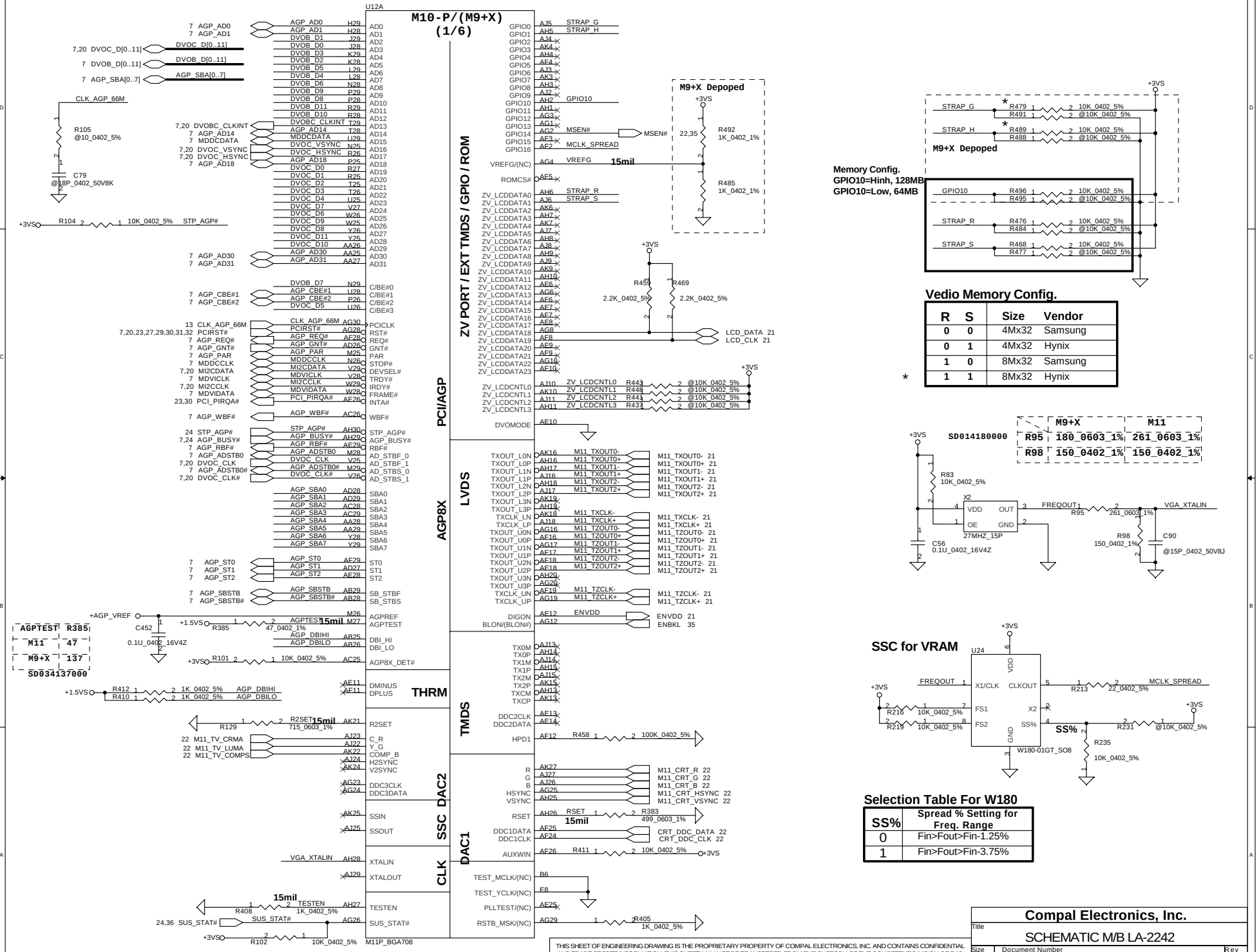

Compal Electronics, Inc.		
Title: SCHEMATIC M/B LA-2242		
Size: Custom	Document Number: 401289	Rev: 2A
Date: 星期一, 四 ?19, 2004	Sheet 64 of 101	

THIS SHEET OF ENGINEERING DRAWING IS THE PROPRIETARY PROPERTY OF COMPAL ELECTRONICS, INC. AND CONTAINS CONFIDENTIAL AND TRADE SECRET INFORMATION. THIS SHEET MAY NOT BE TRANSFERED FROM THE CUSTODY OF THE COMPETENT DIVISION OF R&D DEPARTMENT EXCEPT AS AUTHORIZED BY COMPAL ELECTRONICS, INC. NEITHER THIS SHEET NOR THE INFORMATION IT CONTAINS MAY BE USED BY OR DISCLOSED TO ANY THIRD PARTY WITHOUT PRIOR WRITTEN CONSENT OF COMPAL ELECTRONICS, INC.

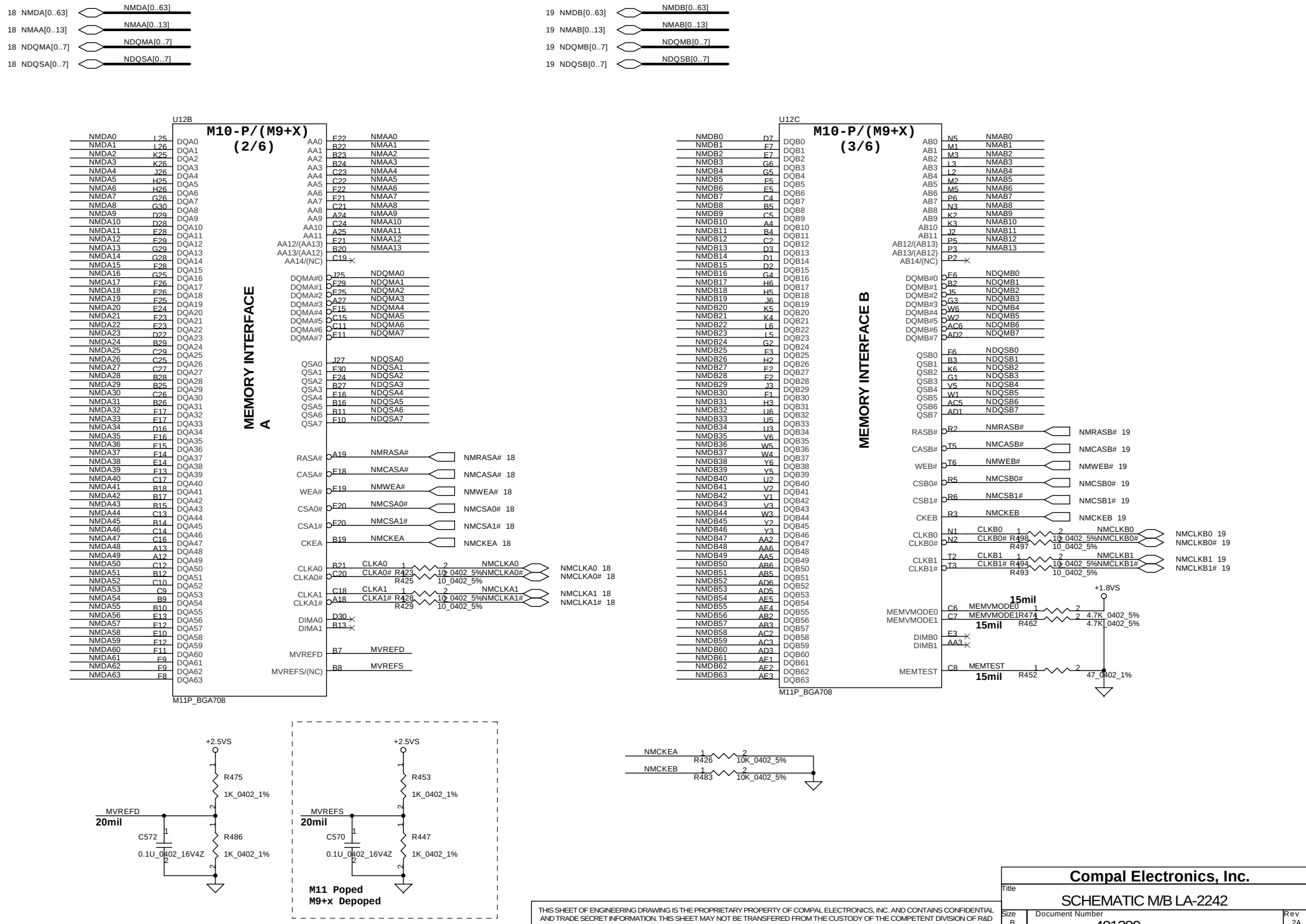

THIS SHEET OF ENGINEERING DRAWING IS THE PROPRIETARY PROPERTY OF COMPAL ELECTRONICS, INC. AND CONTAINS CONFIDENTIAL AND TRADE SECRET INFORMATION. THIS SHEET MAY NOT BE TRANSFERED FROM THE CUSTODY OF THE COMPETENT DIVISION OF R&D DEPARTMENT EXCEPT AS AUTHORIZED BY COMPAL ELECTRONICS, INC. NEITHER THIS SHEET NOR THE INFORMATION IT CONTAINS MAY BE USED BY OR DISCLOSED TO ANY THIRD PARTY WITHOUT PRIOR WRITTEN CONSENT OF COMPAL ELECTRONICS, INC.

Compal Electronics, Inc.

Title: SCHEMATIC M/B LA-2242

Size: B | Document Number: 401289 | Rev: 2A

Date: 星期一, 四月 19, 2004 | Sheet 65 of 101

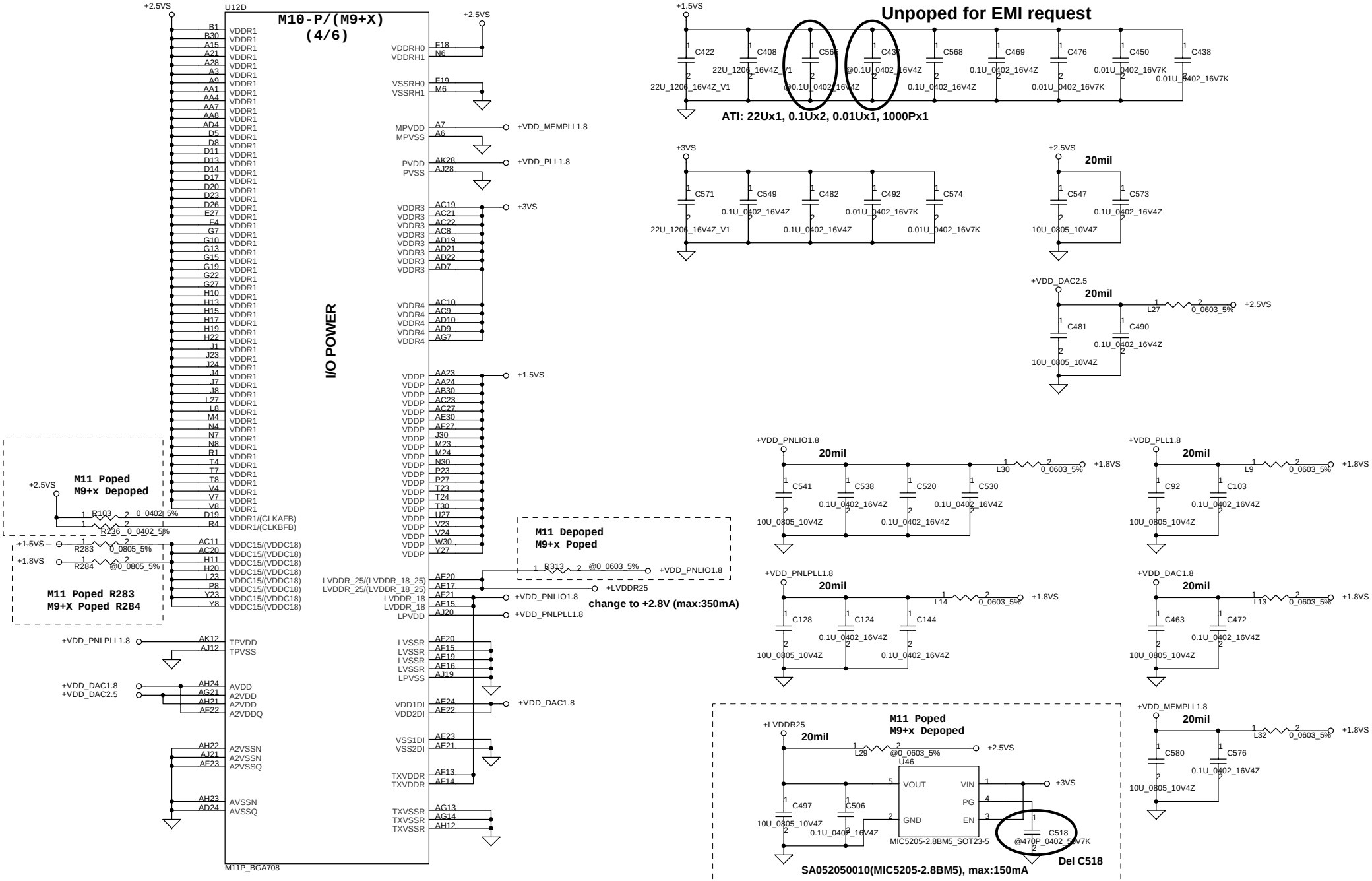

THIS SHEET OF ENGINEERING DRAWING IS THE PROPRIETARY PROPERTY OF COMPAL ELECTRONICS, INC. AND CONTAINS CONFIDENTIAL AND TRADE SECRET INFORMATION. THIS SHEET MAY NOT BE TRANSFERED FROM THE CUSTODY OF THE COMPETENT DIVISION OF R&D DEPARTMENT EXCEPT AS AUTHORIZED BY COMPAL ELECTRONICS, INC. NEITHER THIS SHEET NOR THE INFORMATION IT CONTAINS MAY BE USED BY OR DISCLOSED TO ANY THIRD PARTY WITHOUT PRIOR WRITTEN CONSENT OF COMPAL ELECTRONICS, INC.

Compal Electronics, Inc.

Title	SCHEMATIC M/B LA-2242	
Size B	Document Number 401289	Rev 2A
Date: 星期一, 四月 19, 2004	Sheet 66 of 101	

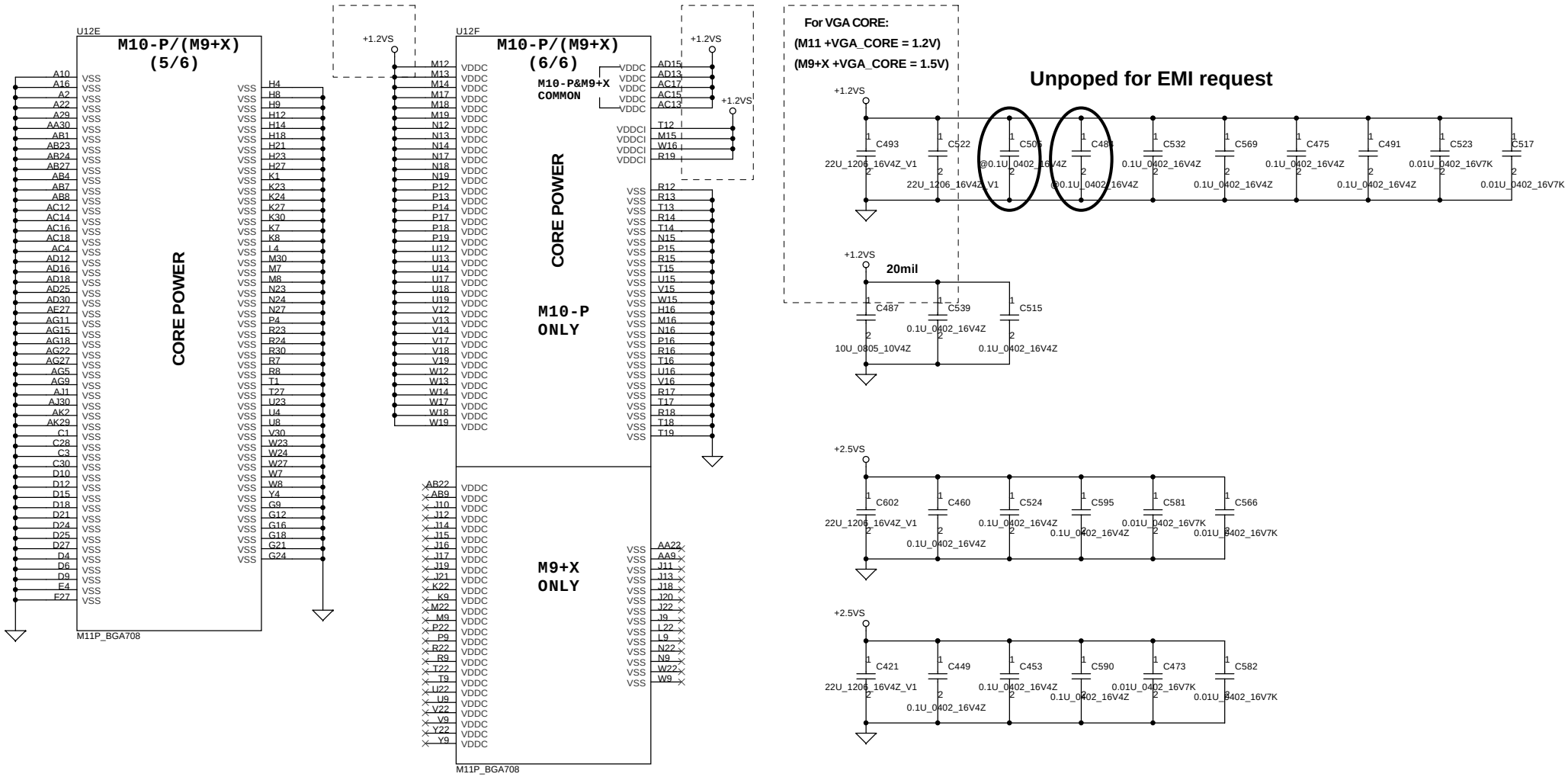

THIS SHEET OF ENGINEERING DRAWING IS THE PROPRIETARY PROPERTY OF COMPAL ELECTRONICS, INC. AND CONTAINS CONFIDENTIAL AND TRADE SECRET INFORMATION. THIS SHEET MAY NOT BE TRANSFERED FROM THE CUSTODY OF THE COMPETENT DIVISION OF R&D DEPARTMENT EXCEPT AS AUTHORIZED BY COMPAL ELECTRONICS, INC. NEITHER THIS SHEET NOR THE INFORMATION IT CONTAINS MAY BE USED BY OR DISCLOSED TO ANY THIRD PARTY WITHOUT PRIOR WRITTEN CONSENT OF COMPAL ELECTRONICS, INC.

Compal Electronics, Inc.		
Title: SCHEMATIC M/B LA-2242		
Size: B	Document Number: 401289	Rev: 2A
Date: 星期一, 四月 19, 2004	Sheet 67 of 101	

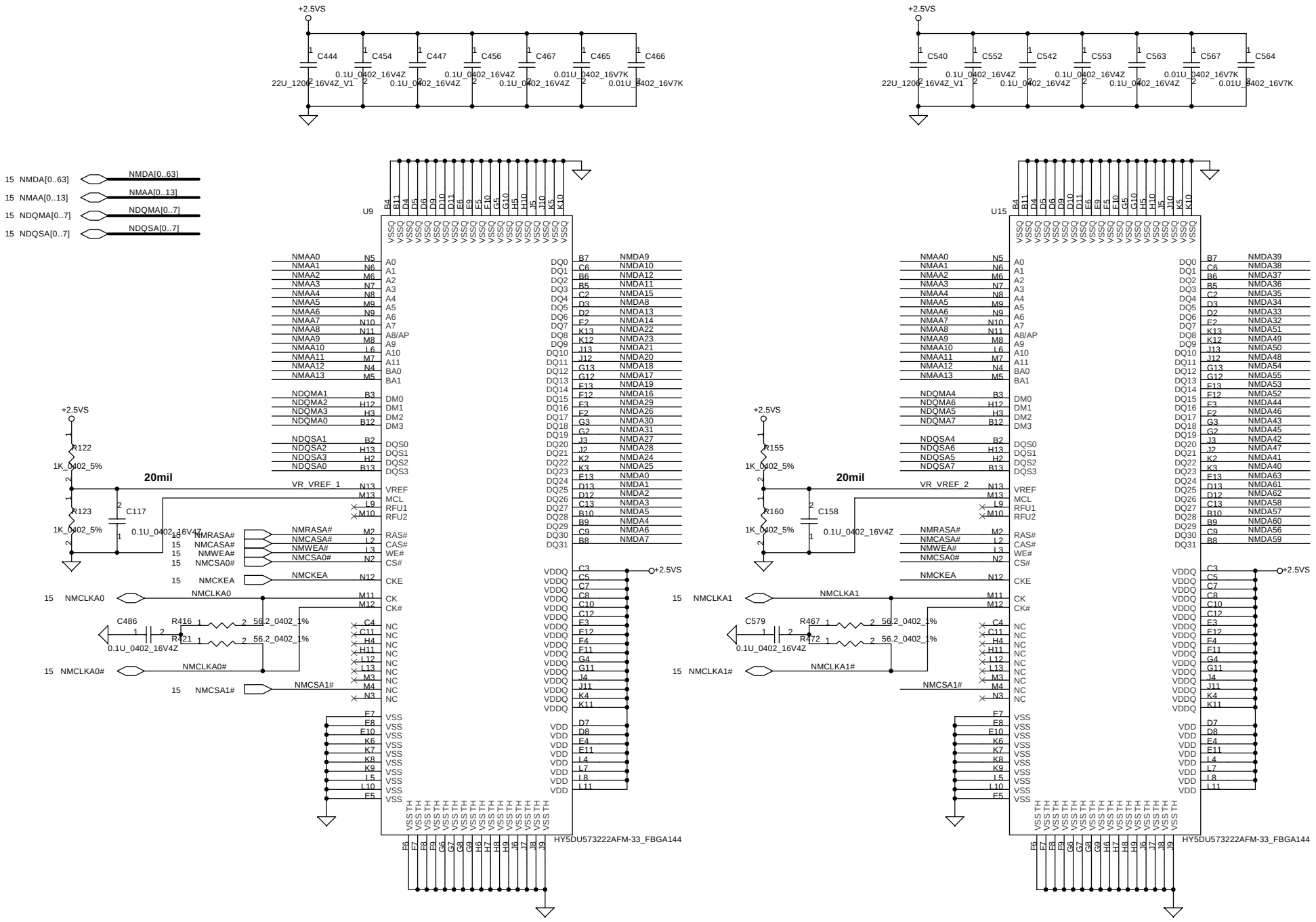

THIS SHEET OF ENGINEERING DRAWING IS THE PROPRIETARY PROPERTY OF COMPAL ELECTRONICS, INC. AND CONTAINS CONFIDENTIAL AND TRADE SECRET INFORMATION. THIS SHEET MAY NOT BE TRANSFERED FROM THE CUSTODY OF THE COMPETENT DIVISION OF R&D DEPARTMENT EXCEPT AS AUTHORIZED BY COMPAL ELECTRONICS, INC. NEITHER THIS SHEET NOR THE INFORMATION IT CONTAINS MAY BE USED BY OR DISCLOSED TO ANY THIRD PARTY WITHOUT PRIOR WRITTEN CONSENT OF COMPAL ELECTRONICS, INC.

Compal Electronics, Inc.	
Title	SCHEMATIC M/B LA-2242
Size B	Document Number 401289
Rev 2A	
Date: 星期一, 四月 19, 2004	Sheet 68 of 101

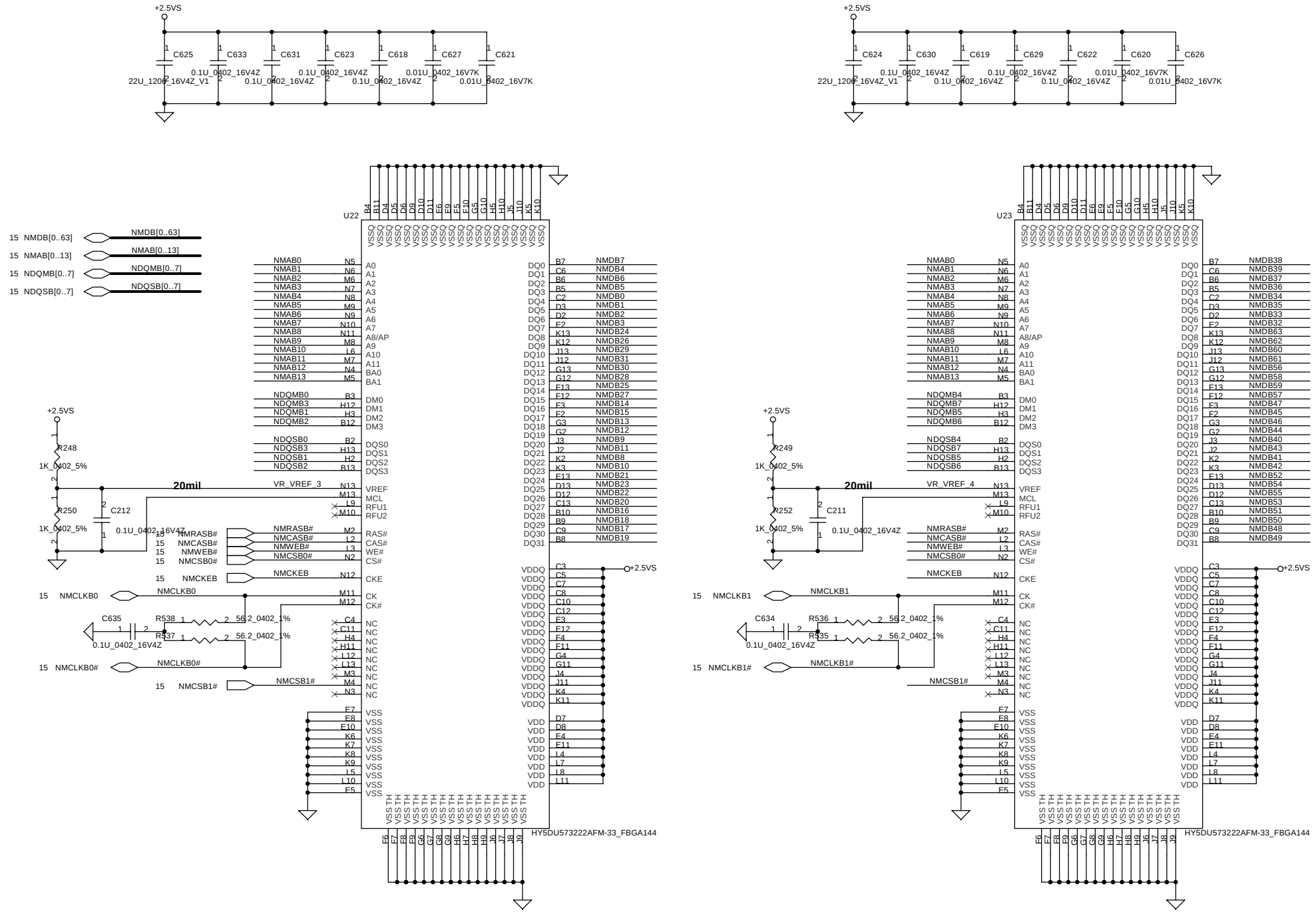

THIS SHEET OF ENGINEERING DRAWING IS THE PROPRIETARY PROPERTY OF COMPAL ELECTRONICS, INC. AND CONTAINS CONFIDENTIAL AND TRADE SECRET INFORMATION. THIS SHEET MAY NOT BE TRANSFERED FROM THE CUSTODY OF THE COMPETENT DIVISION OF R&D DEPARTMENT EXCEPT AS AUTHORIZED BY COMPAL ELECTRONICS, INC. NEITHER THIS SHEET NOR THE INFORMATION IT CONTAINS MAY BE USED BY OR DISCLOSED TO ANY THIRD PARTY WITHOUT PRIOR WRITTEN CONSENT OF COMPAL ELECTRONICS, INC.

Compal Electronics, Inc.		
Title: SCHEMATIC M/B LA-2242		
Size: B	Document Number: 401289	Rev: 2A
Date: 星期一, 四月 19, 2004	Sheet 69 of 101	

TV Encoder

remove this page when use M11P

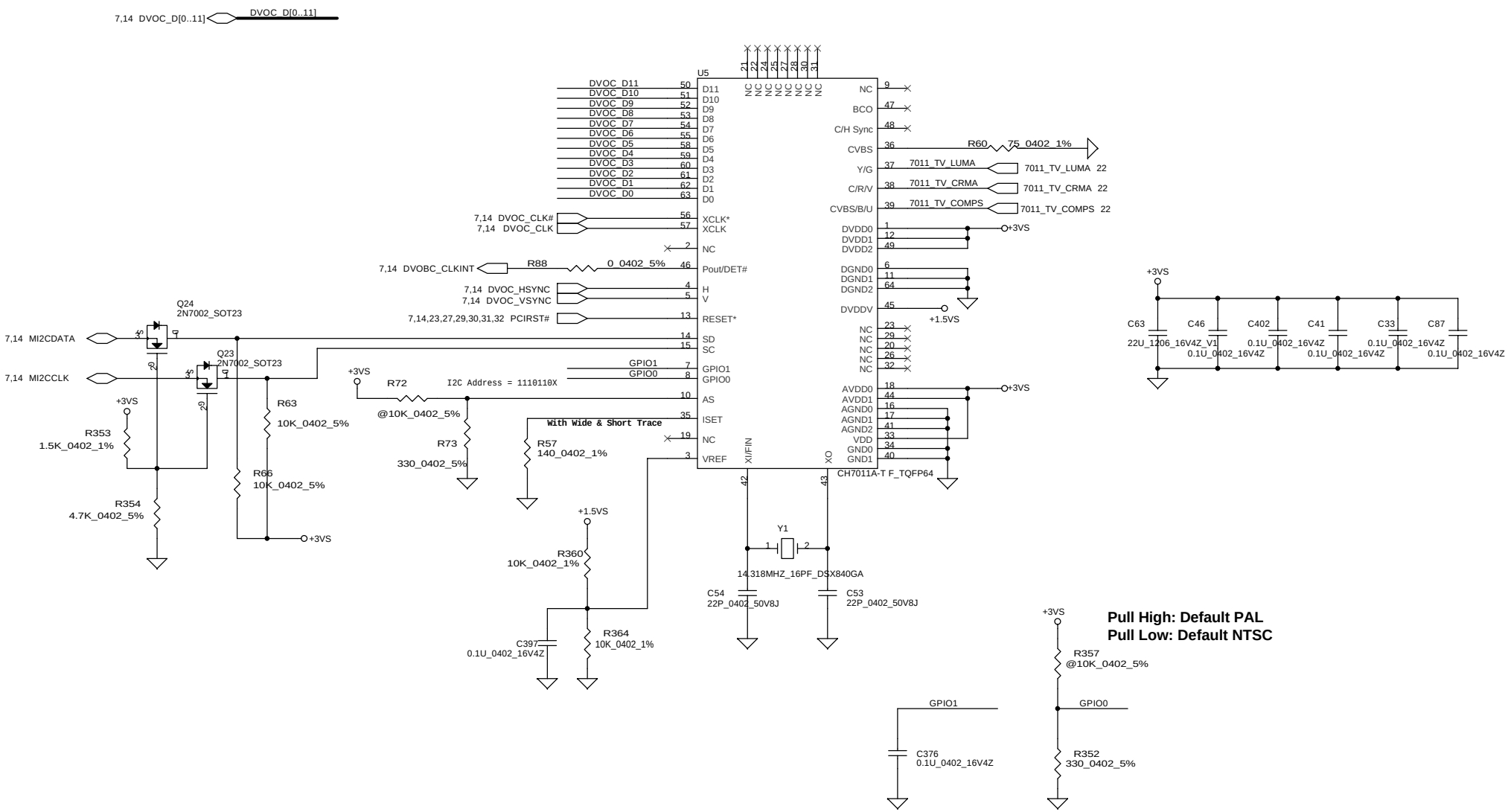

Pull High: Default PAL
Pull Low: Default NTSC

THIS SHEET OF ENGINEERING DRAWING IS THE PROPRIETARY PROPERTY OF COMPAL ELECTRONICS, INC. AND CONTAINS CONFIDENTIAL AND TRADE SECRET INFORMATION. THIS SHEET MAY NOT BE TRANSFERED FROM THE CUSTODY OF THE COMPETENT DIVISION OF R&D DEPARTMENT EXCEPT AS AUTHORIZED BY COMPAL ELECTRONICS, INC. NEITHER THIS SHEET NOR THE INFORMATION IT CONTAINS MAY BE USED BY OR DISCLOSED TO ANY THIRD PARTY WITHOUT PRIOR WRITTEN CONSENT OF COMPAL ELECTRONICS, INC.

Compal Electronics, Inc.		
Title	SCHEMATIC M/B LA-2242	
Size	Document Number 401289	Rev 2A
Date: 星期一, 四月 19, 2004	Sheet 70 of 101	

LCD POWER CIRCUIT

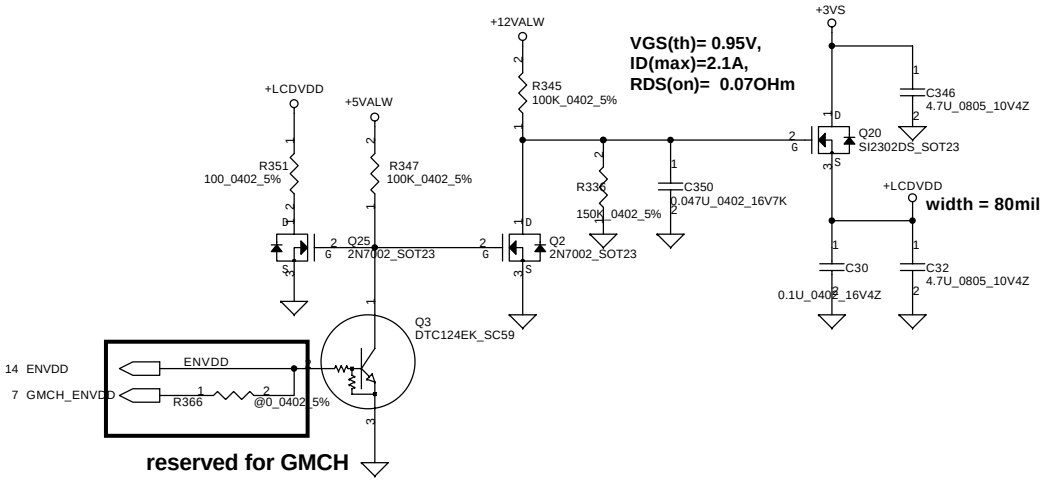

LCD CONN.

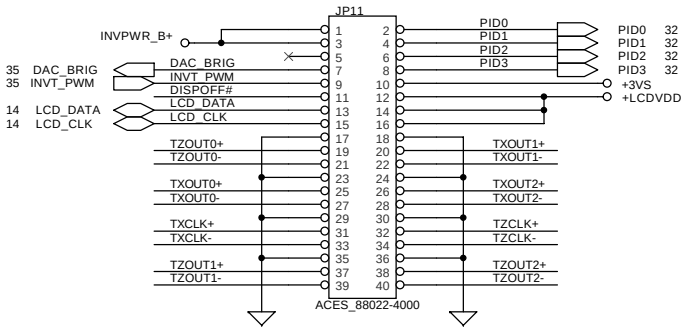

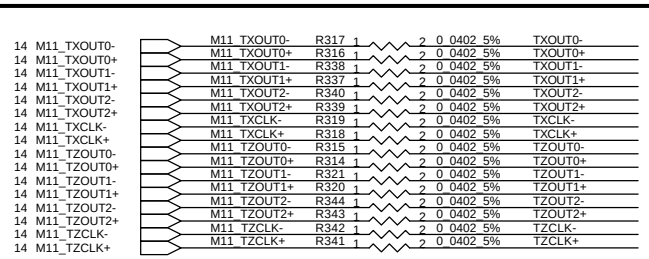

For ATI M11P

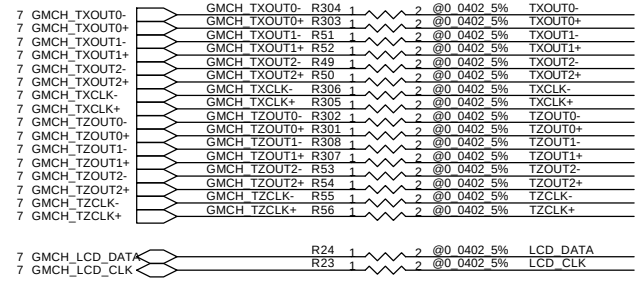

For GMCH

Table 1: Panel ID

PID3	PID2	PID1	PID0	PANEL
0	1	0	0	SANYO TM154WX-22L31 15.4" WXGA 1280X800
0	1	0	1	AU B154EW01 15.4" WXGA 1280X800
0	1	1	0	CPT CLAA154WA01 15.4" WXGA 1280X800
0	1	1	1	SAMSUNG LTN154X1-L02 15.4" WXGA 1280X800
1	0	0	1	SAMSUNG LTN154P1-L02 15.4" WSXGA+ 1680X1050
1	0	1	0	LG LP154W02-A1 15.4" WSXGA+ 1680X1050

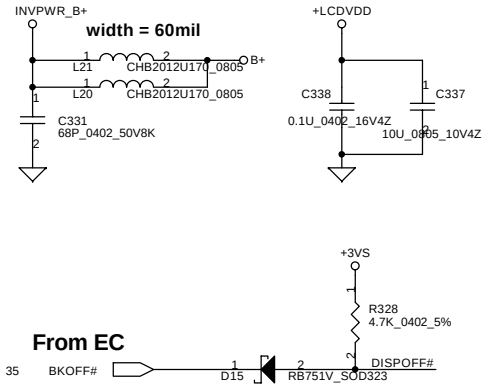

THIS SHEET OF ENGINEERING DRAWING IS THE PROPRIETARY PROPERTY OF COMPAL ELECTRONICS, INC. AND CONTAINS CONFIDENTIAL AND TRADE SECRET INFORMATION. THIS SHEET MAY NOT BE TRANSFERED FROM THE CUSTODY OF THE COMPETENT DIVISION OF R&D DEPARTMENT EXCEPT AS AUTHORIZED BY COMPAL ELECTRONICS, INC. NEITHER THIS SHEET NOR THE INFORMATION IT CONTAINS MAY BE USED BY OR DISCLOSED TO ANY THIRD PARTY WITHOUT PRIOR WRITTEN CONSENT OF COMPAL ELECTRONICS, INC.

Compal Electronics, Inc.

Title: SCHEMATIC M/B LA-2242

Size: B | Document Number: 401289 | Rev: 2A

Date: 星期一, 四月 19, 2004 | Sheet 71 of 101

CRT Connector

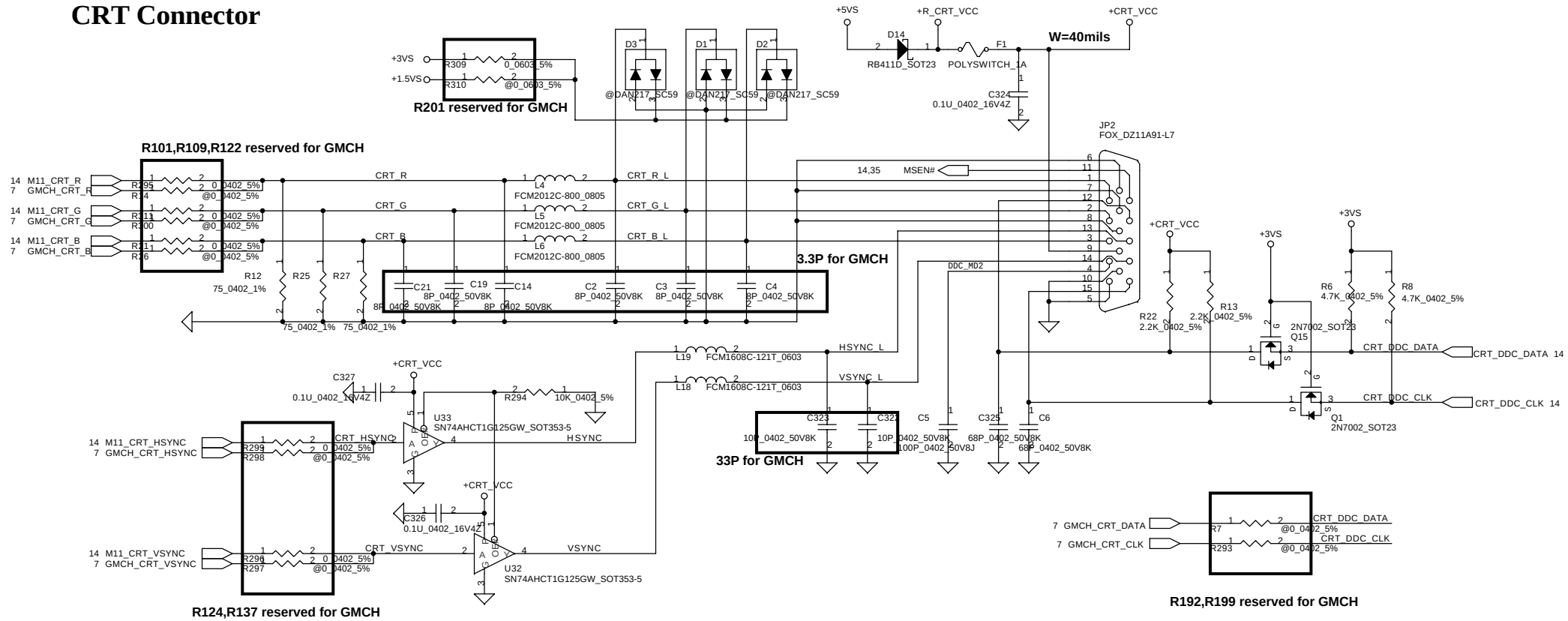

TV-Out Connector

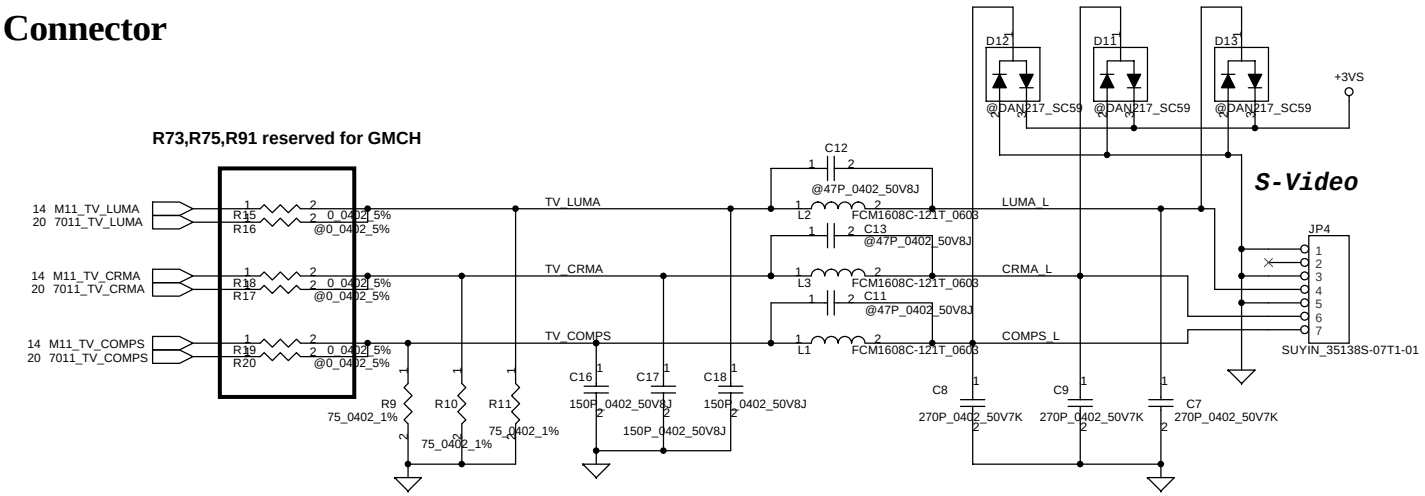

THIS SHEET OF ENGINEERING DRAWING IS THE PROPRIETARY PROPERTY OF COMPAL ELECTRONICS, INC. AND CONTAINS CONFIDENTIAL AND TRADE SECRET INFORMATION. THIS SHEET MAY NOT BE TRANSFERED FROM THE CUSTODY OF THE COMPETENT DIVISION OF R&D DEPARTMENT EXCEPT AS AUTHORIZED BY COMPAL ELECTRONICS, INC. NEITHER THIS SHEET NOR THE INFORMATION IT CONTAINS MAY BE USED BY OR DISCLOSED TO ANY THIRD PARTY WITHOUT PRIOR WRITTEN CONSENT OF COMPAL ELECTRONICS, INC.

Compal Electronics, Inc.	
Title	SCHEMATIC M/B LA-2242
Size	Document Number 401289
Rev	2A
Date:	星期一, 四月 19, 2004
Sheet	72 of 101

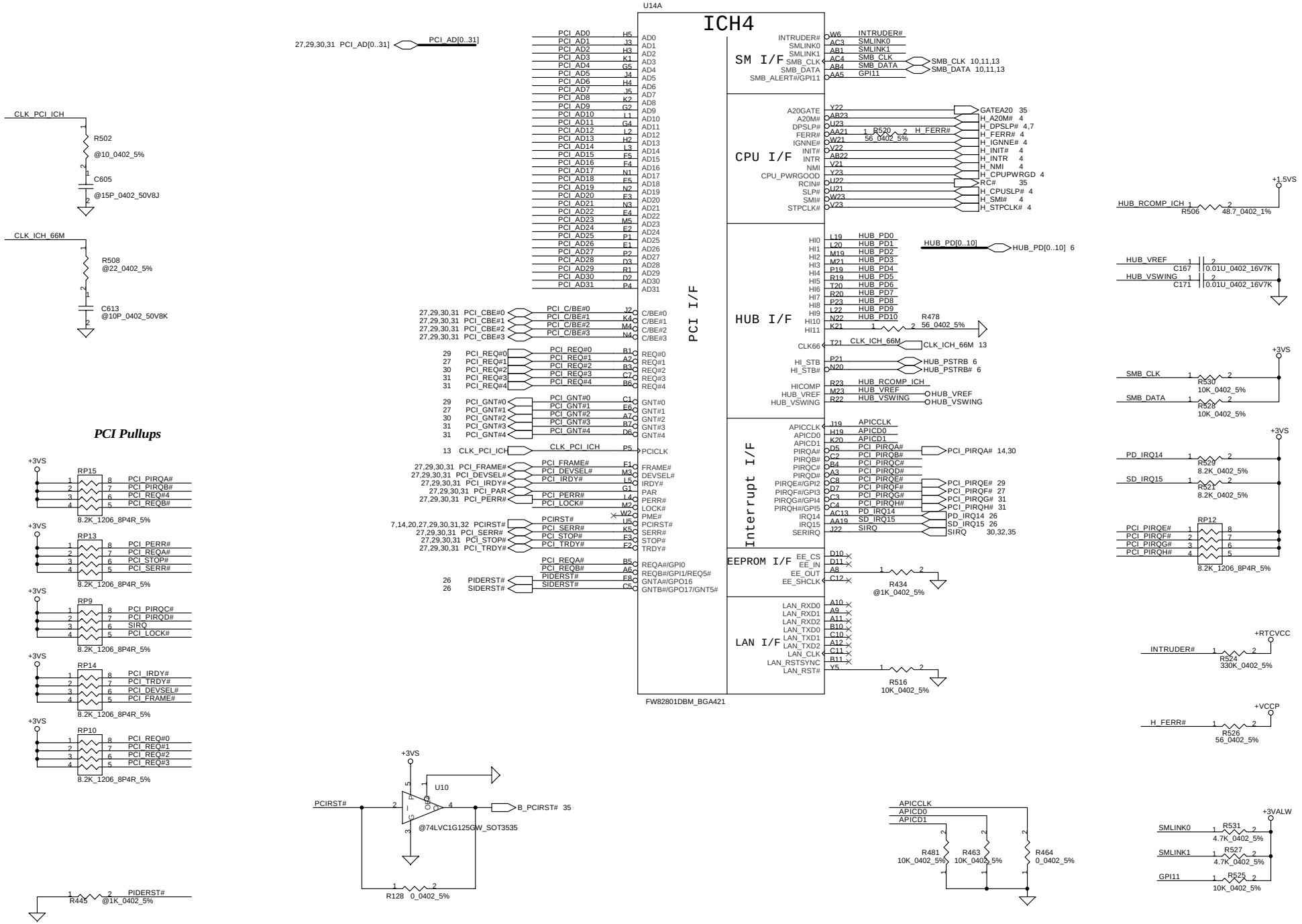

THIS SHEET OF ENGINEERING DRAWING IS THE PROPRIETARY PROPERTY OF COMPAL ELECTRONICS, INC. AND CONTAINS CONFIDENTIAL AND TRADE SECRET INFORMATION. THIS SHEET MAY NOT BE TRANSFERED FROM THE CUSTODY OF THE COMPETENT DIVISION OF R&D DEPARTMENT EXCEPT AS AUTHORIZED BY COMPAL ELECTRONICS, INC. NEITHER THIS SHEET NOR THE INFORMATION IT CONTAINS MAY BE USED BY OR DISCLOSED TO ANY THIRD PARTY WITHOUT PRIOR WRITTEN CONSENT OF COMPAL ELECTRONICS, INC.

Compal Electronics, Inc.

Title: SCHEMATIC M/B LA-2242

Size | Document Number: 401289 | Rev: 2A

Date: 星期一, 四月 19, 2004 | Sheet 73 of 101

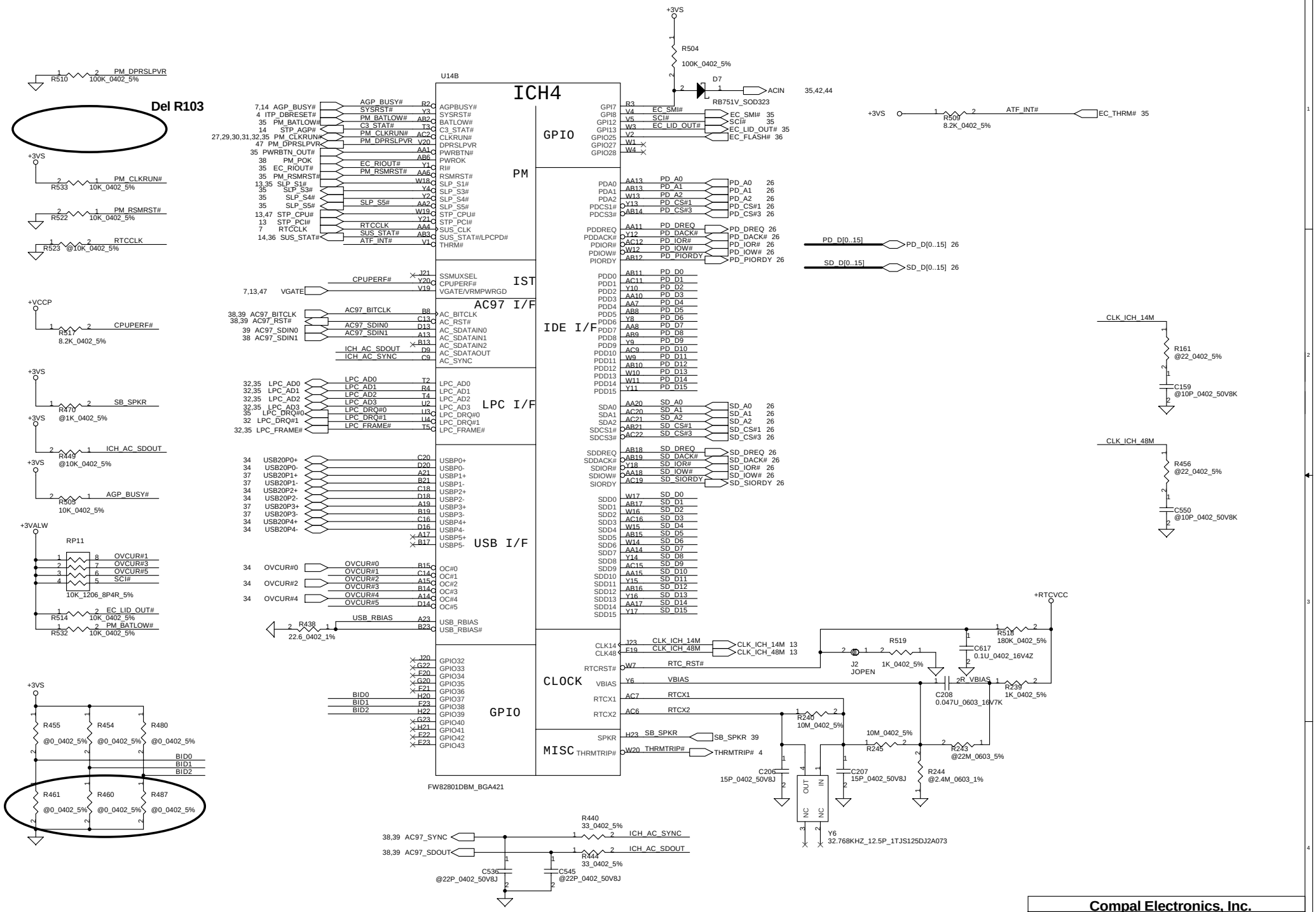

THIS SHEET OF ENGINEERING DRAWING IS THE PROPRIETARY PROPERTY OF COMPAL ELECTRONICS, INC. AND CONTAINS CONFIDENTIAL AND TRADE SECRET INFORMATION. THIS SHEET MAY NOT BE TRANSFERED FROM THE CUSTODY OF THE COMPETENT DIVISION OF R&D DEPARTMENT EXCEPT AS AUTHORIZED BY COMPAL ELECTRONICS, INC. NEITHER THIS SHEET NOR THE INFORMATION IT CONTAINS MAY BE USED BY OR DISCLOSED TO ANY THIRD PARTY WITHOUT PRIOR WRITTEN CONSENT OF COMPAL ELECTRONICS, INC.

Compal Electronics, Inc.

Title: SCHEMATIC M/B LA-2242

Size | Document Number: 401289 | Rev: 2A

Date: 星期一, 四月 19, 2004 | Sheet 74 of 101

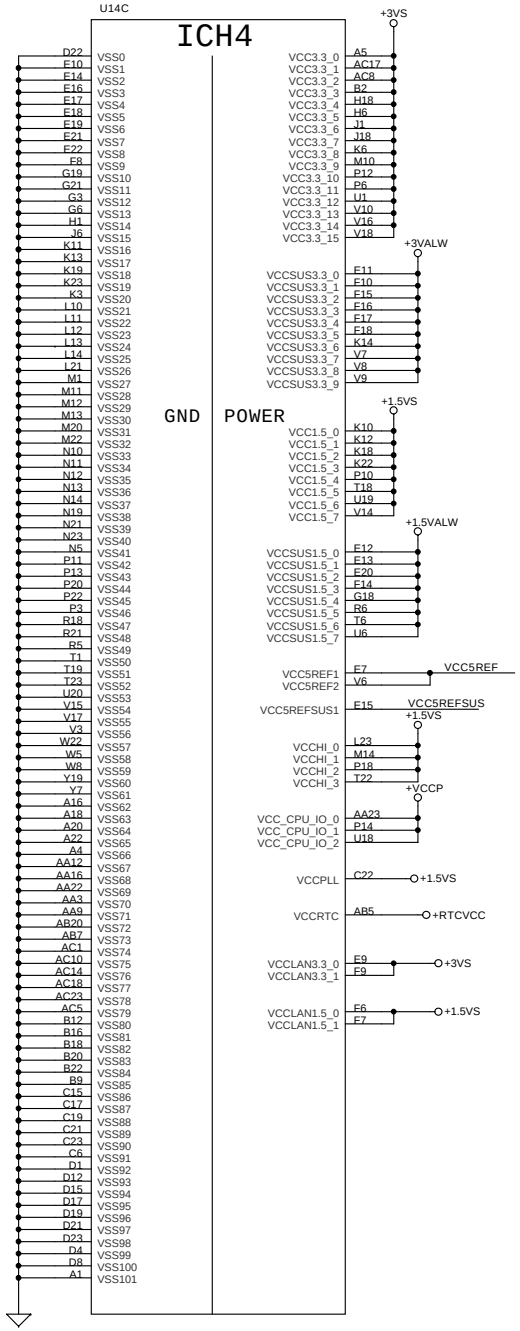

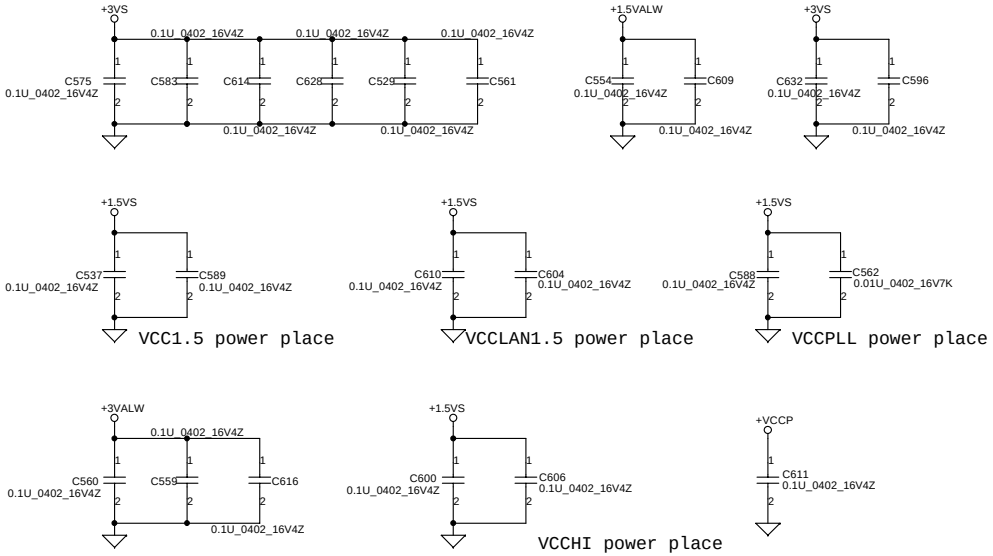

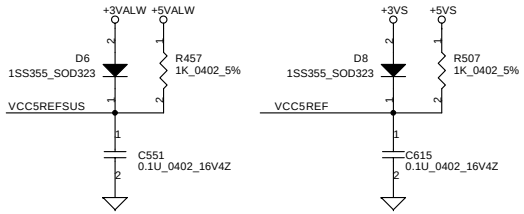

RTC Battery

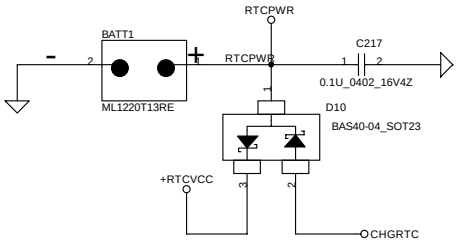

THIS SHEET OF ENGINEERING DRAWING IS THE PROPRIETARY PROPERTY OF COMPAL ELECTRONICS, INC. AND CONTAINS CONFIDENTIAL AND TRADE SECRET INFORMATION. THIS SHEET MAY NOT BE TRANSFERED FROM THE CUSTODY OF THE COMPETENT DIVISION OF R&D DEPARTMENT EXCEPT AS AUTHORIZED BY COMPAL ELECTRONICS, INC. NEITHER THIS SHEET NOR THE INFORMATION IT CONTAINS MAY BE USED BY OR DISCLOSED TO ANY THIRD PARTY WITHOUT PRIOR WRITTEN CONSENT OF COMPAL ELECTRONICS, INC.

Compal Electronics, Inc.

Title: SCHEMATIC M/B LA-2242

Size | Document Number: 401289 | Rev: 2A

Date: 星期一, 四月 19, 2004 | Sheet 75 of 101

Unpoped for EMI request

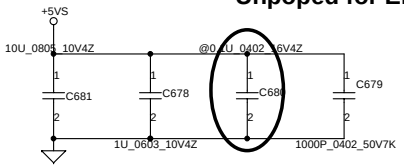

HDD CONN

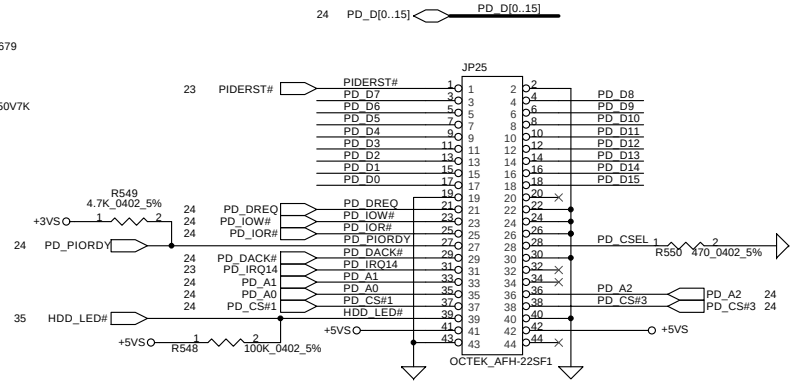

CDROM CONN

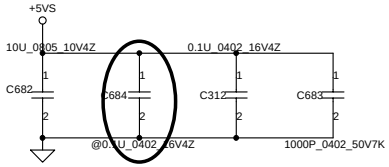

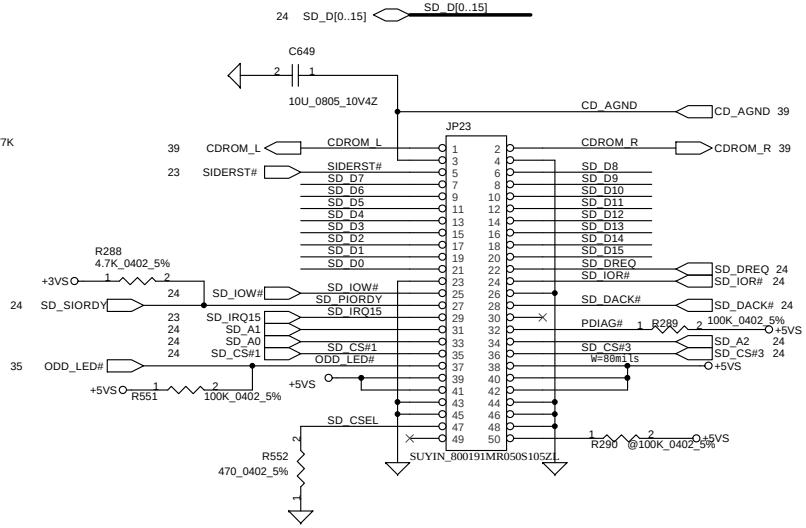

THIS SHEET OF ENGINEERING DRAWING IS THE PROPRIETARY PROPERTY OF COMPAL ELECTRONICS, INC. AND CONTAINS CONFIDENTIAL AND TRADE SECRET INFORMATION. THIS SHEET MAY NOT BE TRANSFERED FROM THE CUSTODY OF THE COMPETENT DIVISION OF R&D DEPARTMENT EXCEPT AS AUTHORIZED BY COMPAL ELECTRONICS, INC. NEITHER THIS SHEET NOR THE INFORMATION IT CONTAINS MAY BE USED BY OR DISCLOSED TO ANY THIRD PARTY WITHOUT PRIOR WRITTEN CONSENT OF COMPAL ELECTRONICS, INC.

Compal Electronics, Inc.

Title: SCHEMATIC M/B LA-2242

Size	Document Number	Rev
	401289	2A

Date: 星期一, 四月 19, 2004 Sheet 76 of 101

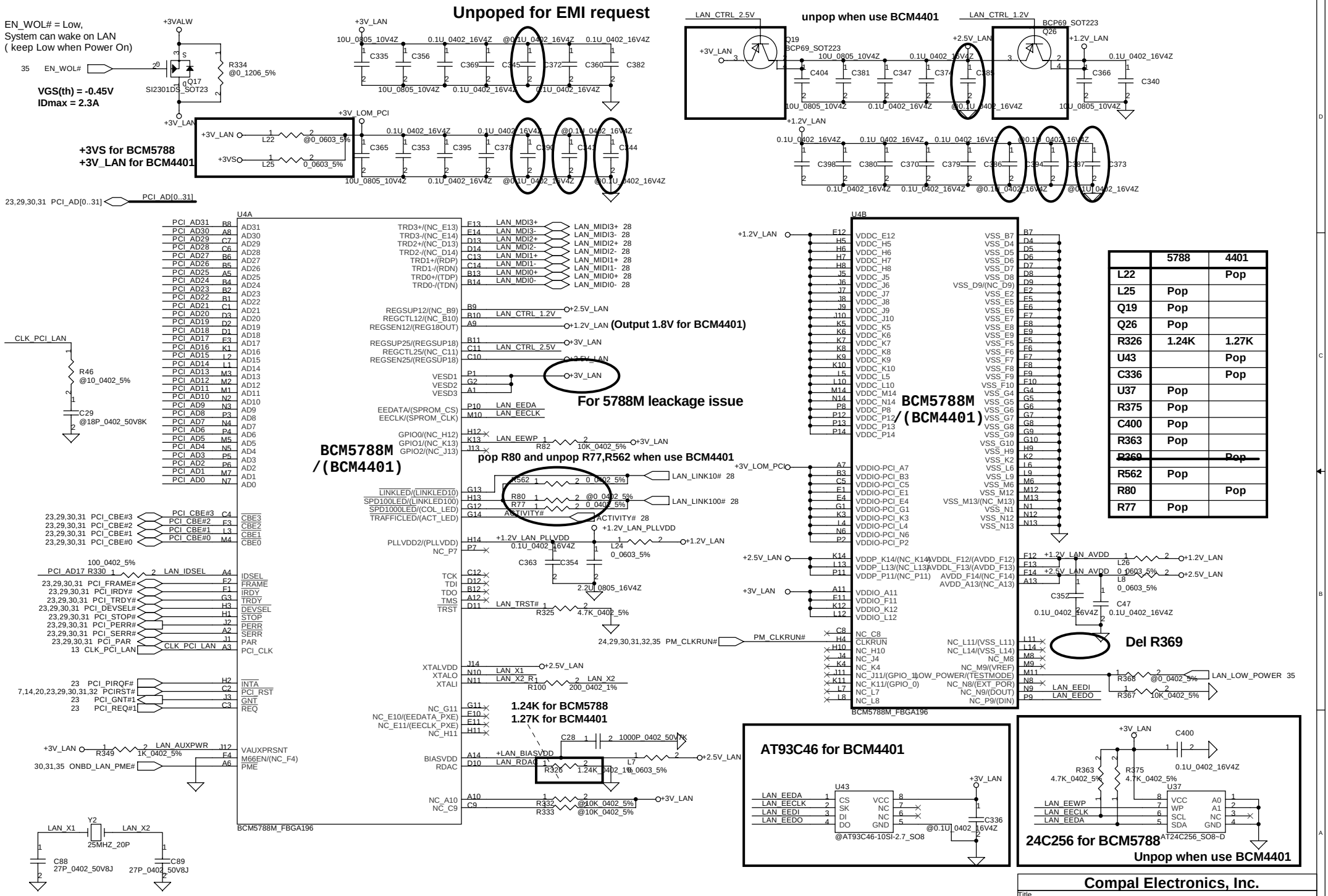

	5788	4401
L22		Pop
L25	Pop	
Q19	Pop	
Q26	Pop	
R326	1.24K	1.27K
U43		Pop
C336		Pop
U37	Pop	
R375	Pop	
C400	Pop	
R363	Pop	
~~R369~~		~~Pop~~
R562	Pop	
R80		Pop
R77	Pop	

THIS SHEET OF ENGINEERING DRAWING IS THE PROPRIETARY PROPERTY OF COMPAL ELECTRONICS, INC. AND CONTAINS CONFIDENTIAL AND TRADE SECRET INFORMATION. THIS SHEET MAY NOT BE TRANSFERED FROM THE CUSTODY OF THE COMPETENT DIVISION OF R&D DEPARTMENT EXCEPT AS AUTHORIZED BY COMPAL ELECTRONICS, INC. NEITHER THIS SHEET NOR THE INFORMATION IT CONTAINS MAY BE USED BY OR DISCLOSED TO ANY THIRD PARTY WITHOUT PRIOR WRITTEN CONSENT OF COMPAL ELECTRONICS, INC.

Compal Electronics, Inc.

Title: SCHEMATIC M/B LA-2242

Size: B | Document Number: 401289 | Rev: 2A

Date: 星期一, 四月 19, 2004 | Sheet 77 of 101

LAN BCM5788M/BCM4401KFB

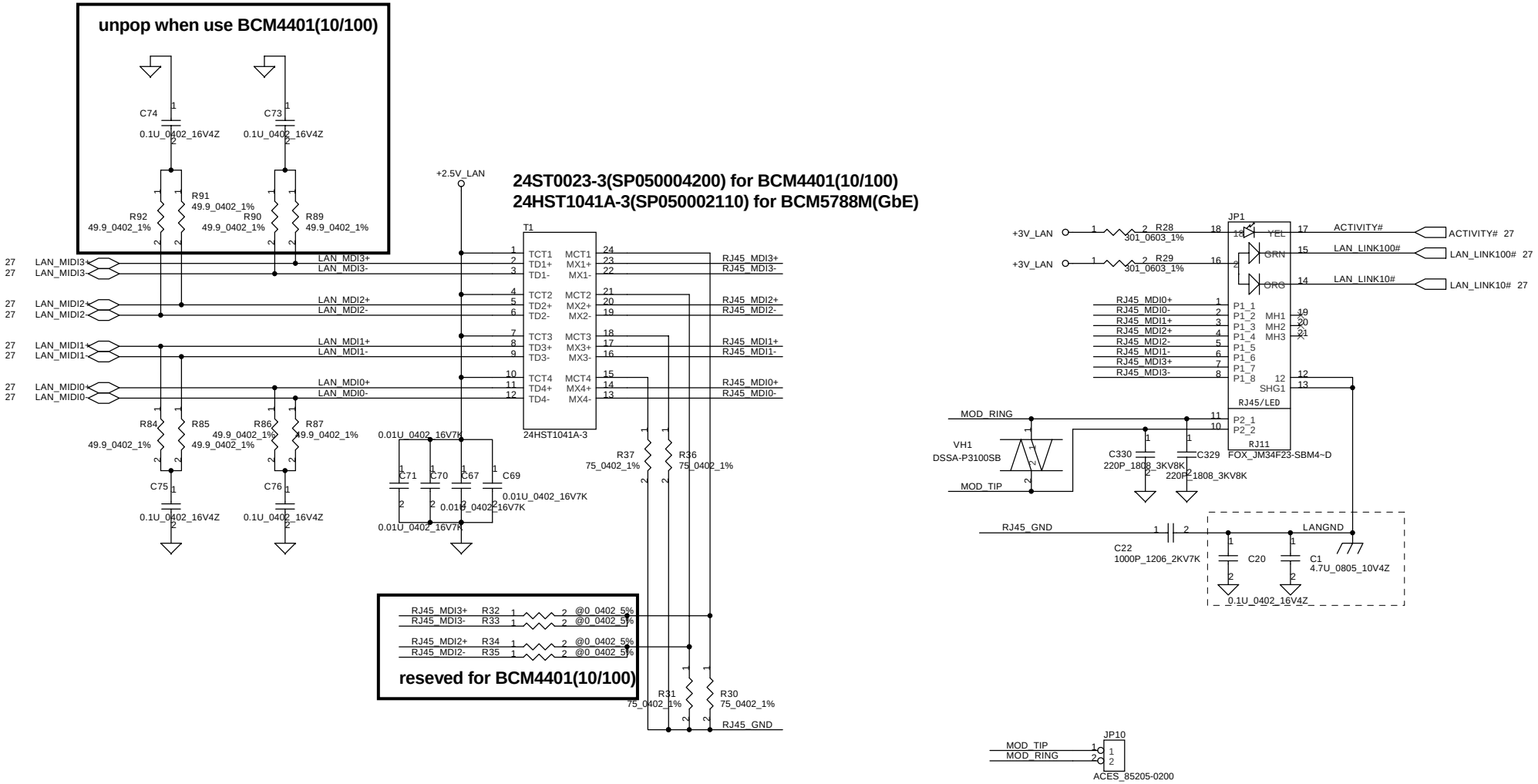

THIS SHEET OF ENGINEERING DRAWING IS THE PROPRIETARY PROPERTY OF COMPAL ELECTRONICS, INC. AND CONTAINS CONFIDENTIAL AND TRADE SECRET INFORMATION. THIS SHEET MAY NOT BE TRANSFERED FROM THE CUSTODY OF THE COMPETENT DIVISION OF R&D DEPARTMENT EXCEPT AS AUTHORIZED BY COMPAL ELECTRONICS, INC. NEITHER THIS SHEET NOR THE INFORMATION IT CONTAINS MAY BE USED BY OR DISCLOSED TO ANY THIRD PARTY WITHOUT PRIOR WRITTEN CONSENT OF COMPAL ELECTRONICS, INC.

Compal Electronics, Inc.		
Title: SCHEMATIC M/B LA-2242		
Size: B	Document Number: 401289	Rev: 2A
Date: 星期一, 四月 19, 2004	Sheet 78 of 101	

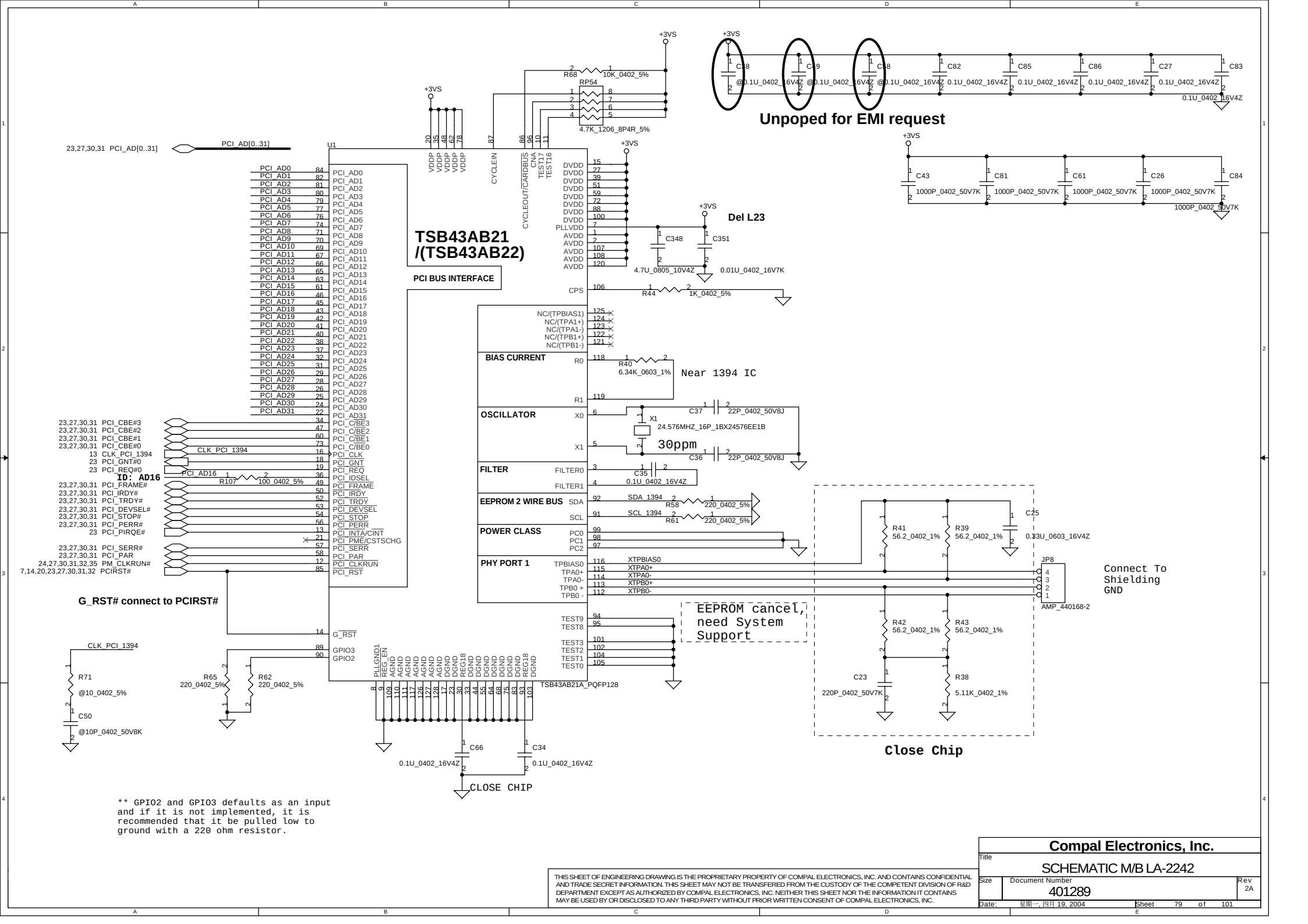
TSB43AB21
/(TSB43AB22)
PCI BUS INTERFACE
U1
TSB43AB21A_PQFP128
PCI_AD[0..31]
23,27,30,31 PCI_AD[0..31]
+3VS
R68 10K_0402_5%
RP54
4.7K_1206_8P4R_5%
Unpoped for EMI request
C18 @0.1U_0402_16V4Z
C19 @0.1U_0402_16V4Z
C20 @0.1U_0402_16V4Z
C82 0.1U_0402_16V4Z
C85 0.1U_0402_16V4Z
C86 0.1U_0402_16V4Z
C27 0.1U_0402_16V4Z
C83 0.1U_0402_16V4Z
C43 1000P_0402_50V7K
C81 1000P_0402_50V7K
C61 1000P_0402_50V7K
C26 1000P_0402_50V7K
C84 1000P_0402_50V7K
Del L23
C348 4.7U_0805_10V4Z
C351 0.01U_0402_16V7K
R44 1K_0402_5%
BIAS CURRENT
R40 6.34K_0603_1%
Near 1394 IC
OSCILLATOR
X1 24.576MHZ_16P_1BX24576EE1B
30ppm
C37 22P_0402_50V8J
C36 22P_0402_50V8J
FILTER
C35 0.1U_0402_16V4Z
EEPROM 2 WIRE BUS
SDA_1394 R58 220_0402_5%
SCL_1394 R61 220_0402_5%
POWER CLASS
PHY PORT 1
XTPBIAS0
XTPA0+
XTPA0-
XTPB0+
XTPB0-
R41 56.2_0402_1%
R39 56.2_0402_1%
C25 0.33U_0603_16V4Z
JP8
AMP_440168-2
Connect To
Shielding
GND
EEPROM cancel,
need System
Support
R42 56.2_0402_1%
R43 56.2_0402_1%
C23 220P_0402_50V7K
R38 5.11K_0402_1%
Close Chip
23,27,30,31 PCI_CBE#3
23,27,30,31 PCI_CBE#2
23,27,30,31 PCI_CBE#1
23,27,30,31 PCI_CBE#0
13 CLK_PCI_1394
23 PCI_GNT#0
23 PCI_REQ#0
ID: AD16
R107 100_0402_5%
23,27,30,31 PCI_FRAME#
23,27,30,31 PCI_IRDY#
23,27,30,31 PCI_TRDY#
23,27,30,31 PCI_DEVSEL#
23,27,30,31 PCI_STOP#
23,27,30,31 PCI_PERR#
23 PCI_PIRQE#
23,27,30,31 PCI_SERR#
23,27,30,31 PCI_PAR
24,27,30,31,32,35 PM_CLKRUN#
7,14,20,23,27,30,31,32 PCIRST#
G_RST# connect to PCIRST#
CLK_PCI_1394
R71 @10_0402_5%
C50 @10P_0402_50V8K
R65 220_0402_5%
R62 220_0402_5%
C66 0.1U_0402_16V4Z
C34 0.1U_0402_16V4Z
CLOSE CHIP
** GPIO2 and GPIO3 defaults as an input
and if it is not implemented, it is
recommended that it be pulled low to
ground with a 220 ohm resistor.
Compal Electronics, Inc.
Title
SCHEMATIC M/B LA-2242
Size
Document Number
401289
Rev
2A
Date: 星期一, 四月 19, 2004
Sheet 79 of 101
THIS SHEET OF ENGINEERING DRAWING IS THE PROPRIETARY PROPERTY OF COMPAL ELECTRONICS, INC. AND CONTAINS CONFIDENTIAL AND TRADE SECRET INFORMATION. THIS SHEET MAY NOT BE TRANSFERED FROM THE CUSTODY OF THE COMPETENT DIVISION OF R&D DEPARTMENT EXCEPT AS AUTHORIZED BY COMPAL ELECTRONICS, INC. NEITHER THIS SHEET NOR THE INFORMATION IT CONTAINS MAY BE USED BY OR DISCLOSED TO ANY THIRD PARTY WITHOUT PRIOR WRITTEN CONSENT OF COMPAL ELECTRONICS, INC.

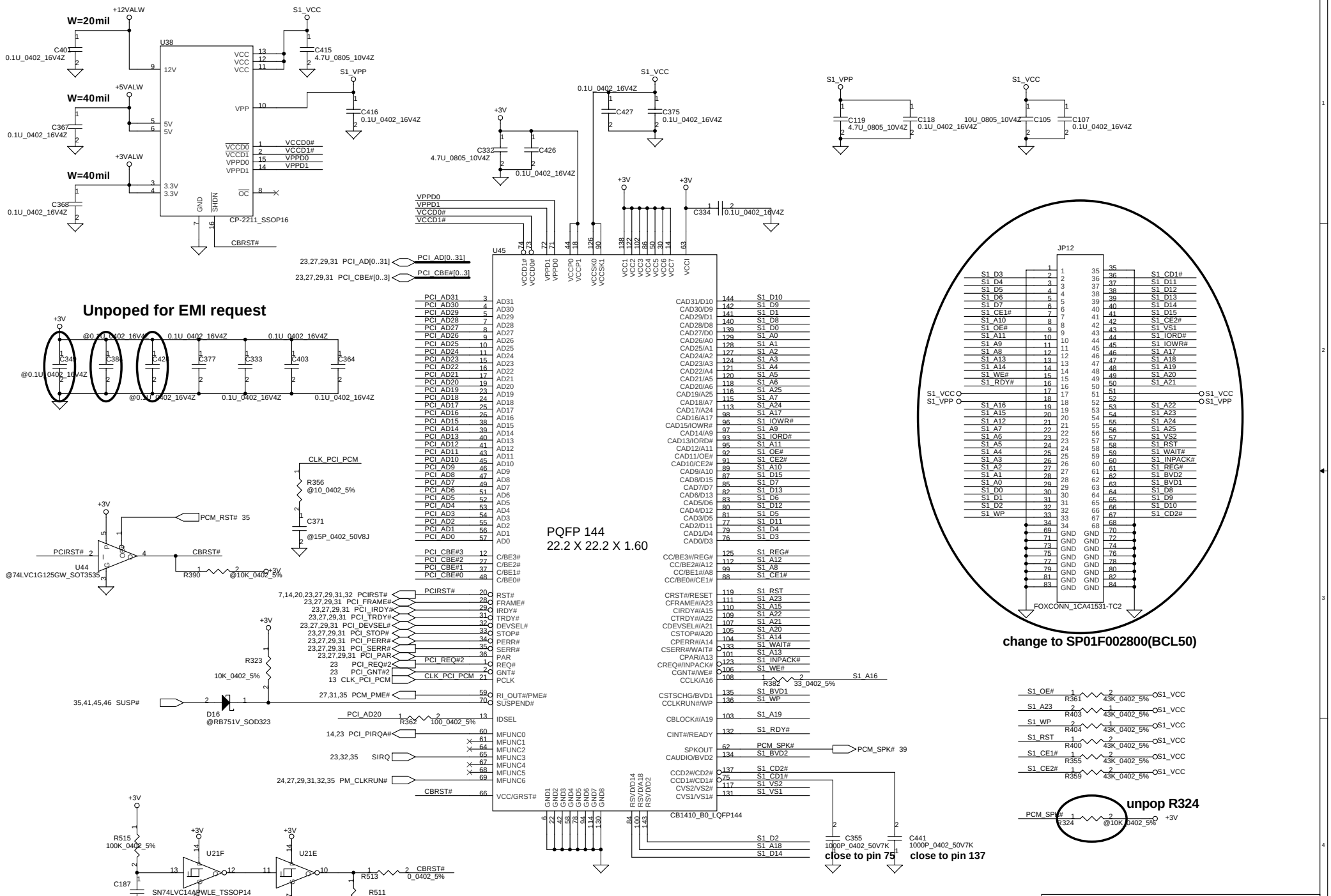

THIS SHEET OF ENGINEERING DRAWING IS THE PROPRIETARY PROPERTY OF COMPAL ELECTRONICS, INC. AND CONTAINS CONFIDENTIAL AND TRADE SECRET INFORMATION. THIS SHEET MAY NOT BE TRANSFERED FROM THE CUSTODY OF THE COMPETENT DIVISION OF R&D DEPARTMENT EXCEPT AS AUTHORIZED BY COMPAL ELECTRONICS, INC. NEITHER THIS SHEET NOR THE INFORMATION IT CONTAINS MAY BE USED BY OR DISCLOSED TO ANY THIRD PARTY WITHOUT PRIOR WRITTEN CONSENT OF COMPAL ELECTRONICS, INC.

Compal Electronics, Inc.

Title: SCHEMATIC M/B LA-2242

Size: | Document Number: 401289 | Rev: 2A

Date: 星期一, 四月 19, 2004 | Sheet 80 of 101

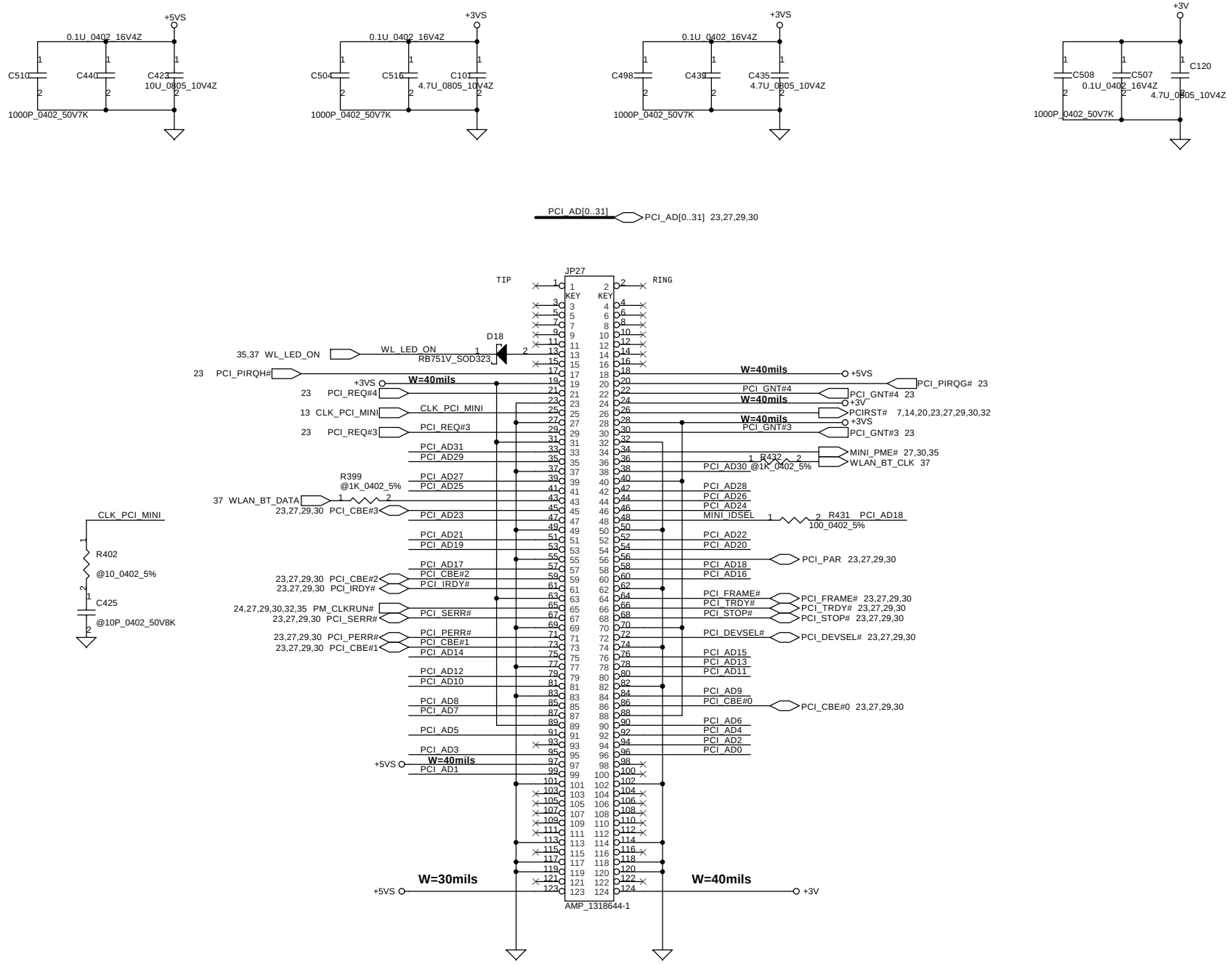

THIS SHEET OF ENGINEERING DRAWING IS THE PROPRIETARY PROPERTY OF COMPAL ELECTRONICS, INC. AND CONTAINS CONFIDENTIAL AND TRADE SECRET INFORMATION. THIS SHEET MAY NOT BE TRANSFERED FROM THE CUSTODY OF THE COMPETENT DIVISION OF R&D DEPARTMENT EXCEPT AS AUTHORIZED BY COMPAL ELECTRONICS, INC. NEITHER THIS SHEET NOR THE INFORMATION IT CONTAINS MAY BE USED BY OR DISCLOSED TO ANY THIRD PARTY WITHOUT PRIOR WRITTEN CONSENT OF COMPAL ELECTRONICS, INC.

Compal Electronics, Inc.

Title	SCHEMATIC M/B LA-2242	
Size	Document Number 401289	Rev 2A
Date: 星期一, 四月 19, 2004	Sheet 81 of 101	

SUPER I/O SMsC LPC47N217

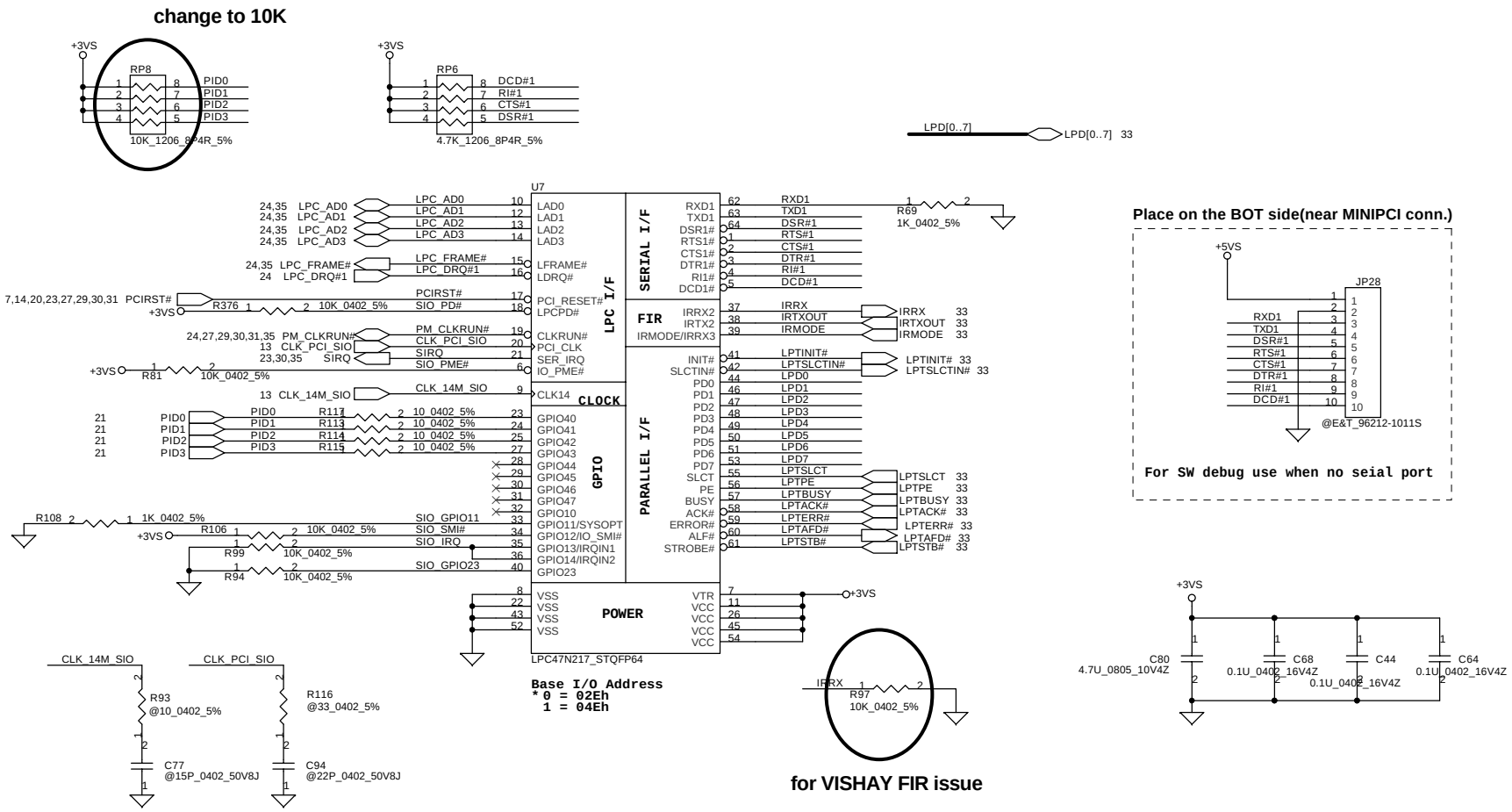

THIS SHEET OF ENGINEERING DRAWING IS THE PROPRIETARY PROPERTY OF COMPAL ELECTRONICS, INC. AND CONTAINS CONFIDENTIAL AND TRADE SECRET INFORMATION. THIS SHEET MAY NOT BE TRANSFERED FROM THE CUSTODY OF THE COMPETENT DIVISION OF R&D DEPARTMENT EXCEPT AS AUTHORIZED BY COMPAL ELECTRONICS, INC. NEITHER THIS SHEET NOR THE INFORMATION IT CONTAINS MAY BE USED BY OR DISCLOSED TO ANY THIRD PARTY WITHOUT PRIOR WRITTEN CONSENT OF COMPAL ELECTRONICS, INC.

Compal Electronics, Inc.	
Title	SCHEMATIC M/B LA-2242
Size B	Document Number 401289
Rev	2A
Date: 星期一, 四月 19, 2004	Sheet 82 of 101

Parallel Port

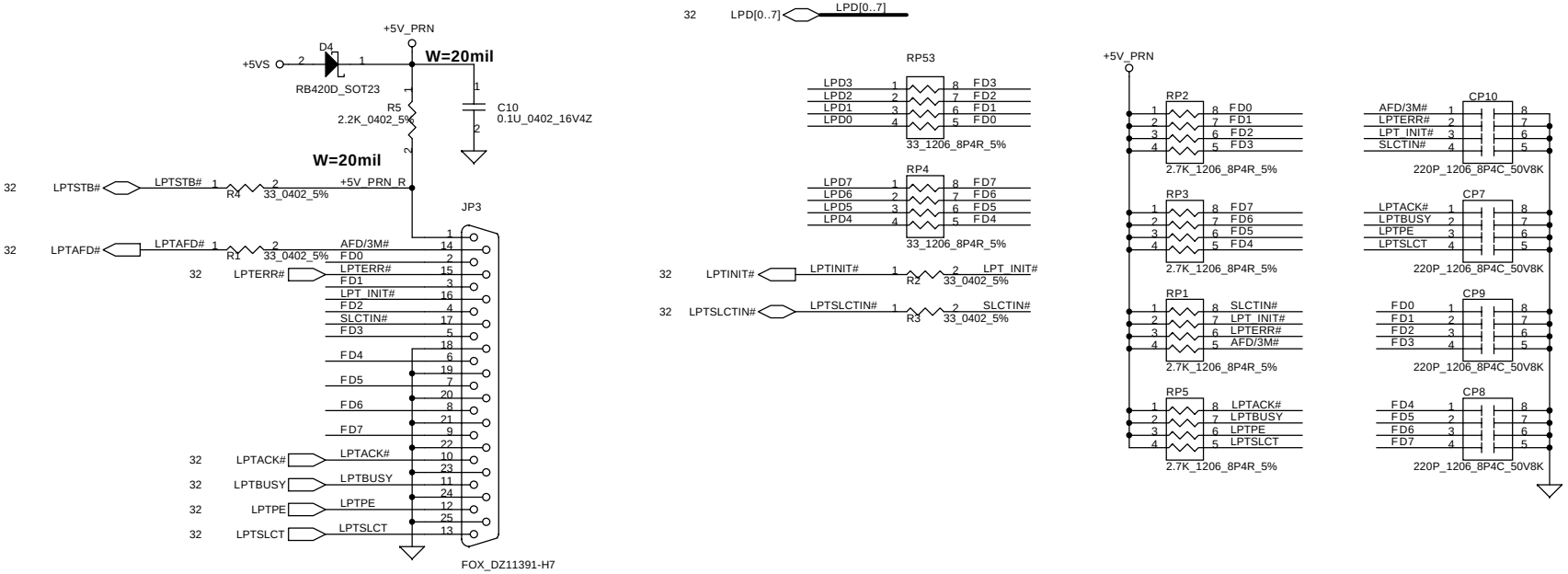

FIR Module

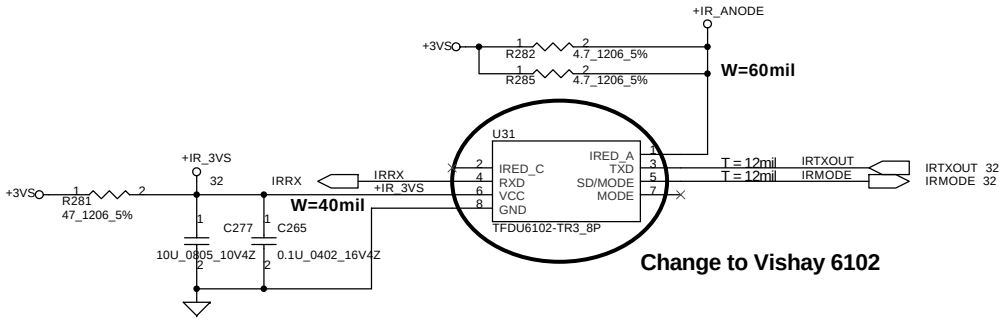

THIS SHEET OF ENGINEERING DRAWING IS THE PROPRIETARY PROPERTY OF COMPAL ELECTRONICS, INC. AND CONTAINS CONFIDENTIAL AND TRADE SECRET INFORMATION. THIS SHEET MAY NOT BE TRANSFERED FROM THE CUSTODY OF THE COMPETENT DIVISION OF R&D DEPARTMENT EXCEPT AS AUTHORIZED BY COMPAL ELECTRONICS, INC. NEITHER THIS SHEET NOR THE INFORMATION IT CONTAINS MAY BE USED BY OR DISCLOSED TO ANY THIRD PARTY WITHOUT PRIOR WRITTEN CONSENT OF COMPAL ELECTRONICS, INC.

Compal Electronics, Inc.		
Title	SCHEMATIC M/B LA-2242	
Size	Document Number 401289	Rev 2A
Date: 星期一, 四月 19, 2004	Sheet 83 of 101	

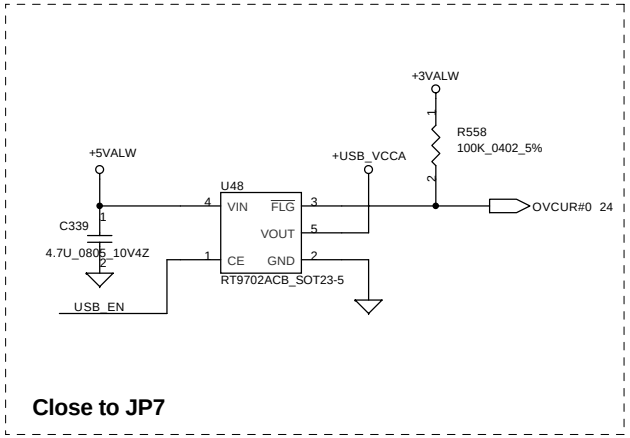

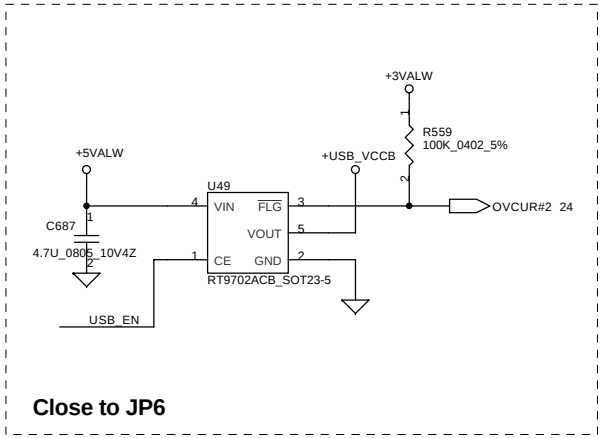

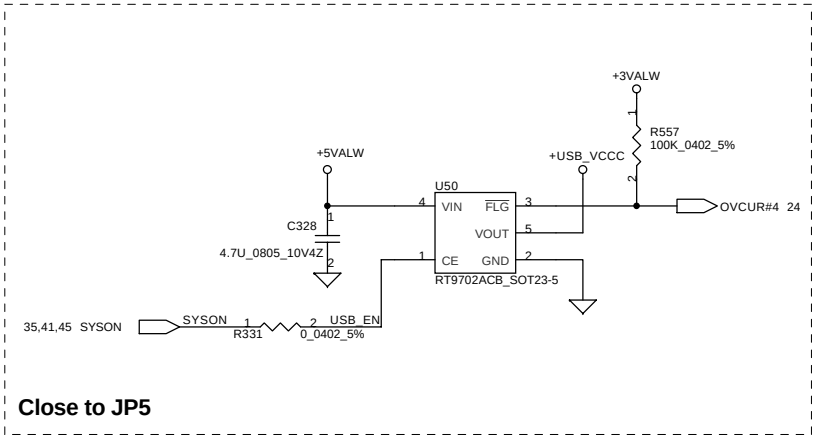

USB CONN. 1

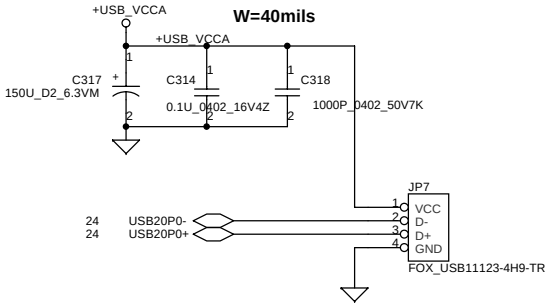

USB CONN. 2

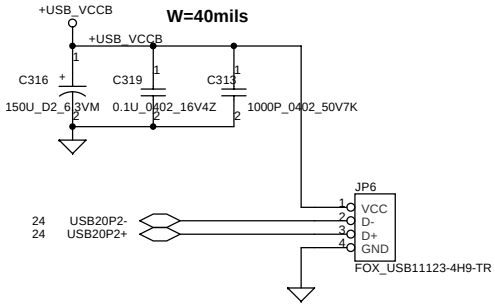

USB CONN. 3

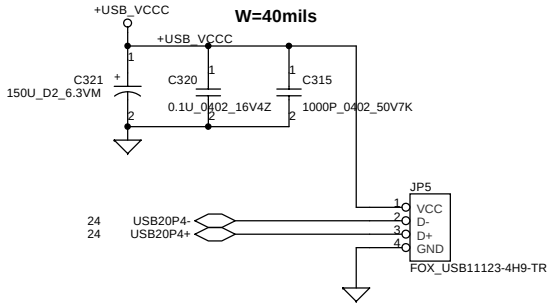

THIS SHEET OF ENGINEERING DRAWING IS THE PROPRIETARY PROPERTY OF COMPAL ELECTRONICS, INC. AND CONTAINS CONFIDENTIAL AND TRADE SECRET INFORMATION. THIS SHEET MAY NOT BE TRANSFERED FROM THE CUSTODY OF THE COMPETENT DIVISION OF R&D DEPARTMENT EXCEPT AS AUTHORIZED BY COMPAL ELECTRONICS, INC. NEITHER THIS SHEET NOR THE INFORMATION IT CONTAINS MAY BE USED BY OR DISCLOSED TO ANY THIRD PARTY WITHOUT PRIOR WRITTEN CONSENT OF COMPAL ELECTRONICS, INC.

Compal Electronics, Inc.		
Title: SCHEMATIC M/B LA-2242		
Size: B	Document Number: 401289	Rev: 2A
Date: 星期一, 四月 19, 2004	Sheet 84 of 101	

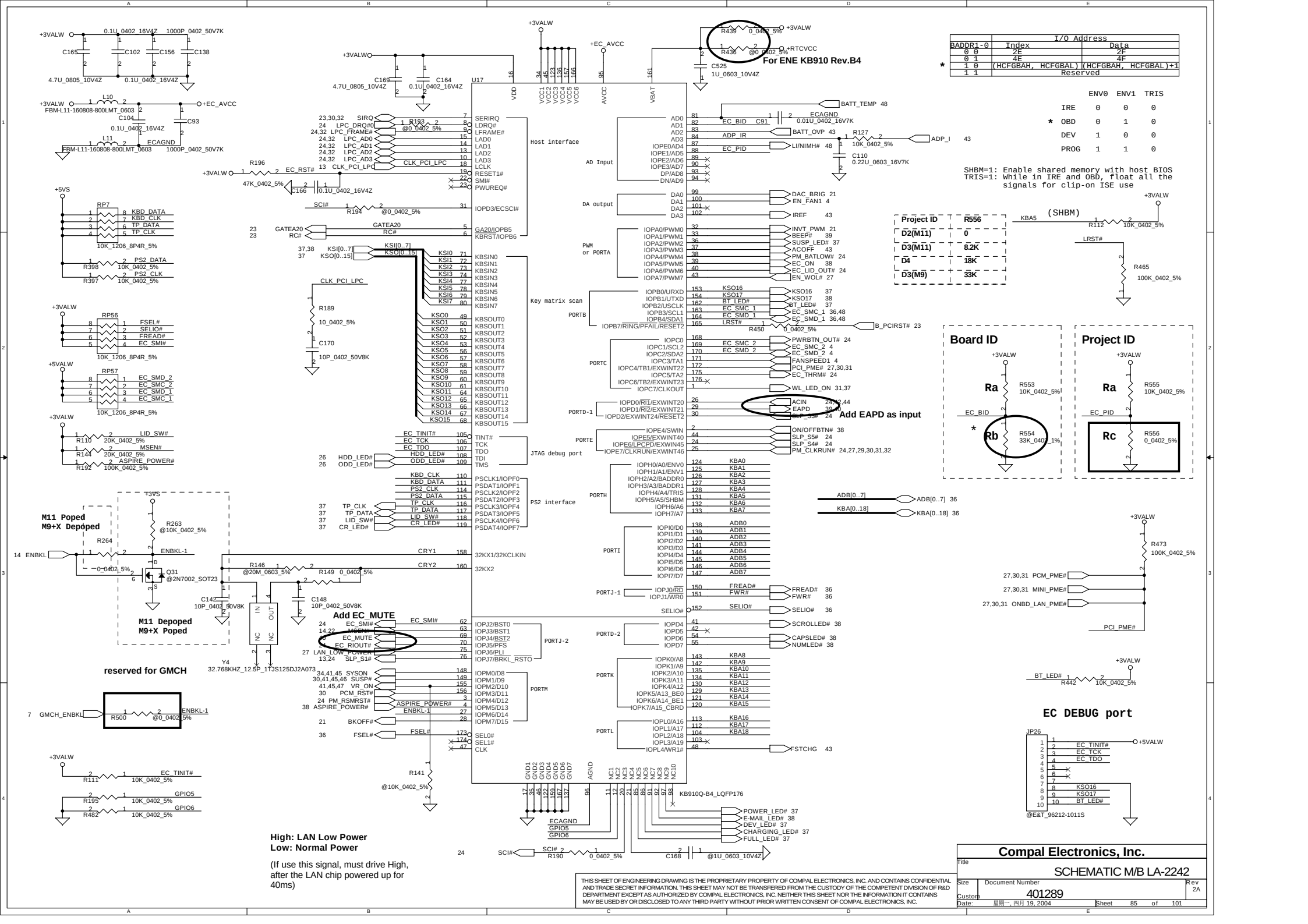

	I/O Address	
BADDR1-0	Index	Data
0 0	2E	2F
0 1	4E	4F
* 1 0	(HCFGBAH, HCFGBAL)	(HCFGBAH, HCFGBAL)+1
1 1	Reserved	

	ENV0	ENV1	TRIS
IRE	0	0	0
* OBD	0	1	0
DEV	1	0	0
PROG	1	1	0

Project ID	R556
D2(M11)	0
D3(M11)	8.2K
D4	18K
D3(M9)	33K

THIS SHEET OF ENGINEERING DRAWING IS THE PROPRIETARY PROPERTY OF COMPAL ELECTRONICS, INC. AND CONTAINS CONFIDENTIAL AND TRADE SECRET INFORMATION. THIS SHEET MAY NOT BE TRANSFERED FROM THE CUSTODY OF THE COMPETENT DIVISION OF R&D DEPARTMENT EXCEPT AS AUTHORIZED BY COMPAL ELECTRONICS, INC. NEITHER THIS SHEET NOR THE INFORMATION IT CONTAINS MAY BE USED BY OR DISCLOSED TO ANY THIRD PARTY WITHOUT PRIOR WRITTEN CONSENT OF COMPAL ELECTRONICS, INC.

Compal Electronics, Inc.

Title: SCHEMATIC M/B LA-2242

Size: Custom | Document Number: 401289 | Rev: 2A

Date: 星期一, 四月 19, 2004 | Sheet 85 of 101

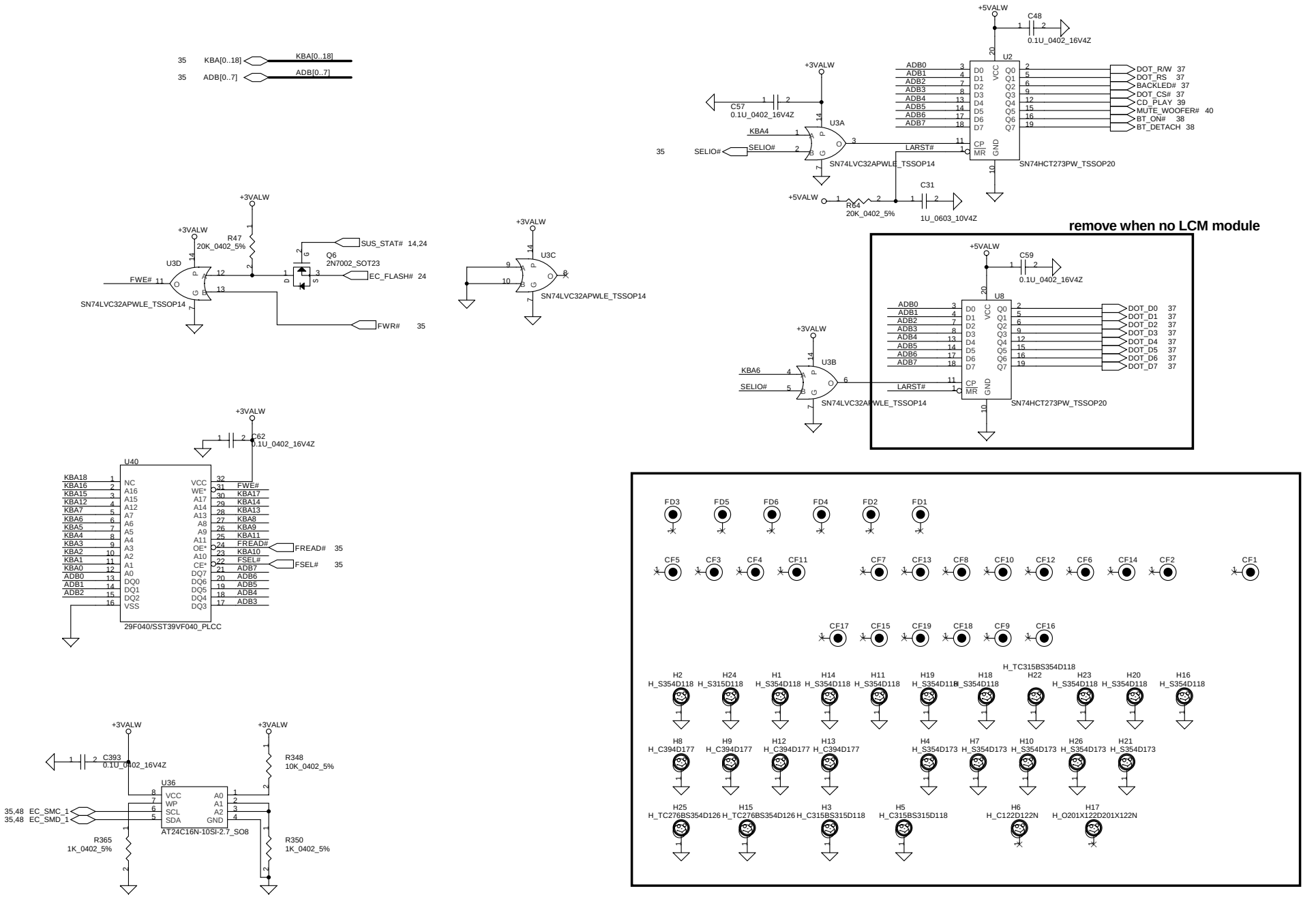

THIS SHEET OF ENGINEERING DRAWING IS THE PROPRIETARY PROPERTY OF COMPAL ELECTRONICS, INC. AND CONTAINS CONFIDENTIAL AND TRADE SECRET INFORMATION. THIS SHEET MAY NOT BE TRANSFERED FROM THE CUSTODY OF THE COMPETENT DIVISION OF R&D DEPARTMENT EXCEPT AS AUTHORIZED BY COMPAL ELECTRONICS, INC. NEITHER THIS SHEET NOR THE INFORMATION IT CONTAINS MAY BE USED BY OR DISCLOSED TO ANY THIRD PARTY WITHOUT PRIOR WRITTEN CONSENT OF COMPAL ELECTRONICS, INC.

Compal Electronics, Inc.

Title: SCHEMATIC M/B LA-2242

Size | Document Number: 401289 | Rev: 2A

Date: 星期一, 四月 19, 2004 | Sheet 86 of 101

To LCM Board

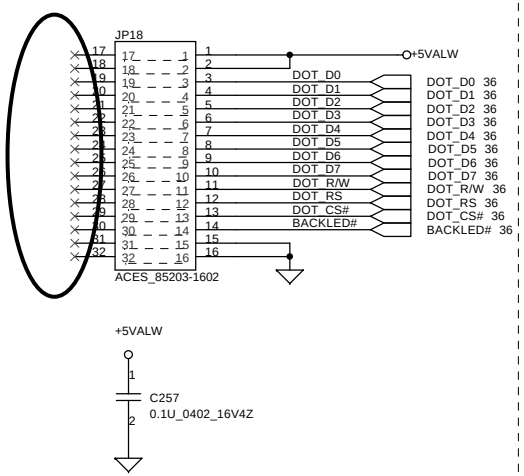

To T/P Board

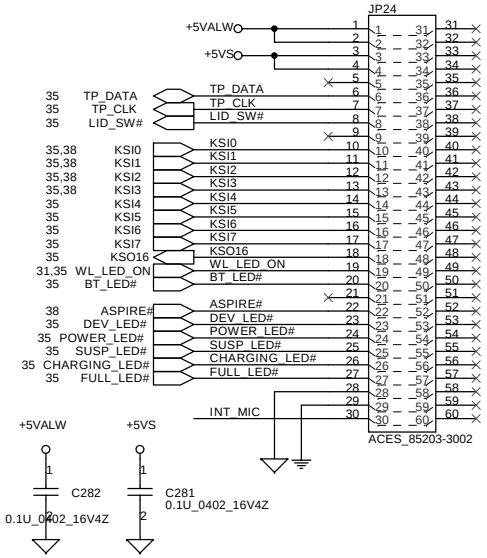

Add CP11,CP12,C688

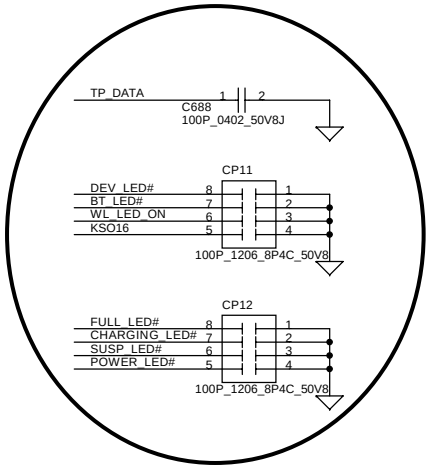

INT_KBD CONN.

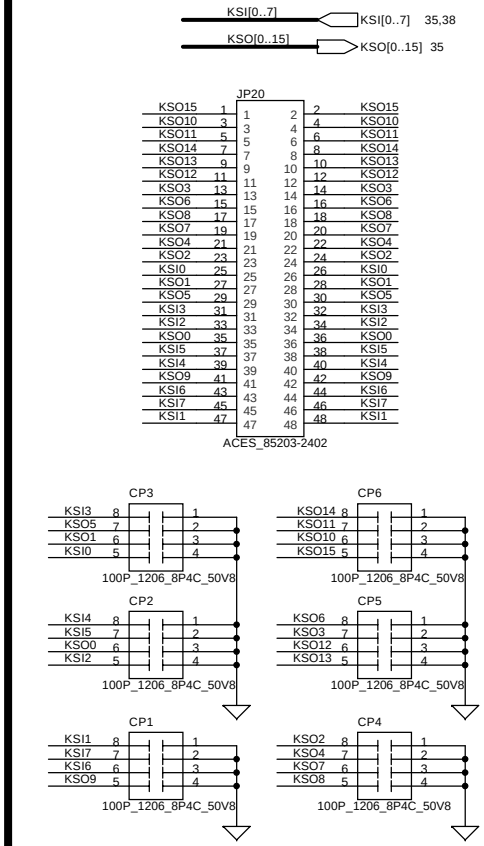

To Card Reader Board

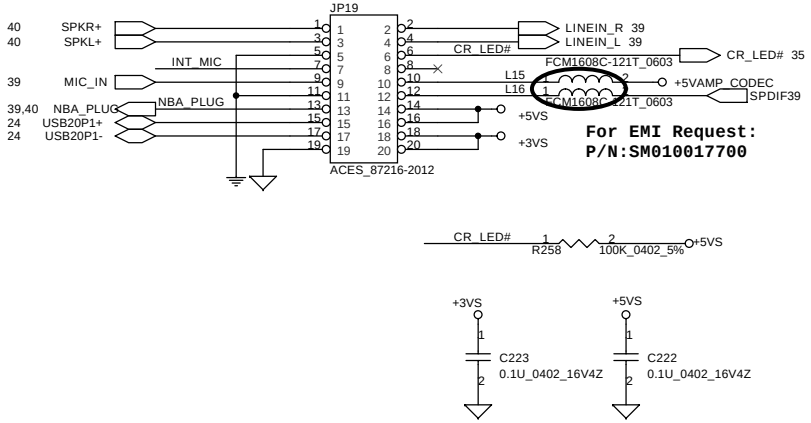

Bluetooth Conn.

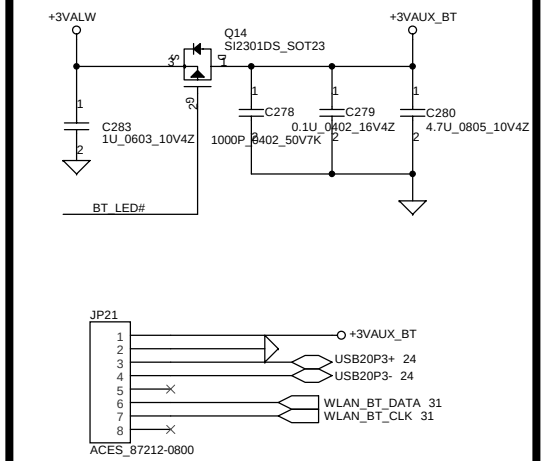

THIS SHEET OF ENGINEERING DRAWING IS THE PROPRIETARY PROPERTY OF COMPAL ELECTRONICS, INC. AND CONTAINS CONFIDENTIAL AND TRADE SECRET INFORMATION. THIS SHEET MAY NOT BE TRANSFERED FROM THE CUSTODY OF THE COMPETENT DIVISION OF R&D DEPARTMENT EXCEPT AS AUTHORIZED BY COMPAL ELECTRONICS, INC. NEITHER THIS SHEET NOR THE INFORMATION IT CONTAINS MAY BE USED BY OR DISCLOSED TO ANY THIRD PARTY WITHOUT PRIOR WRITTEN CONSENT OF COMPAL ELECTRONICS, INC.

Compal Electronics, Inc.

Title: SCHEMATIC M/B LA-2242

Size	Document Number	Rev
	401289	2A

Date: 星期一, 四月 19, 2004 Sheet 87 of 101

MDC Conn.

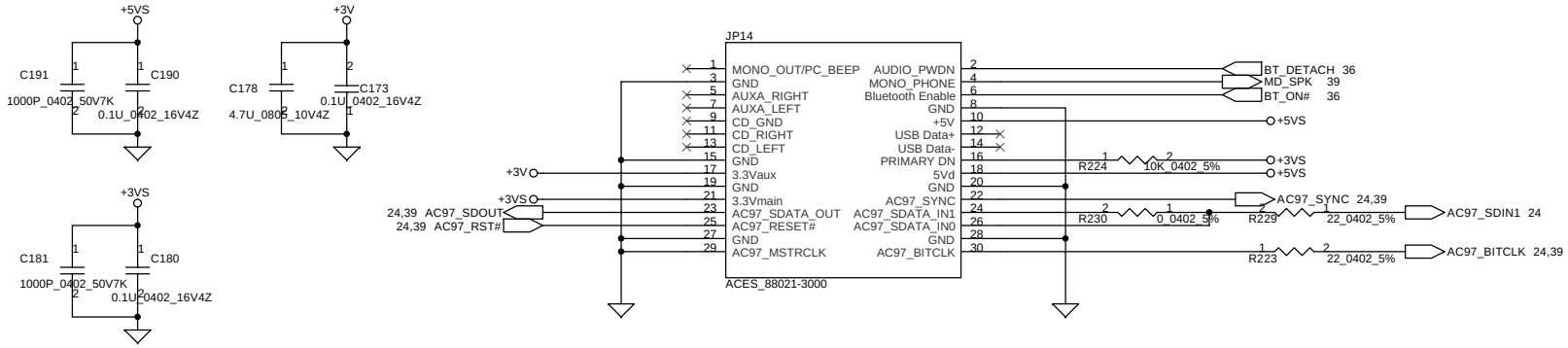

ON/OFF BUTTON

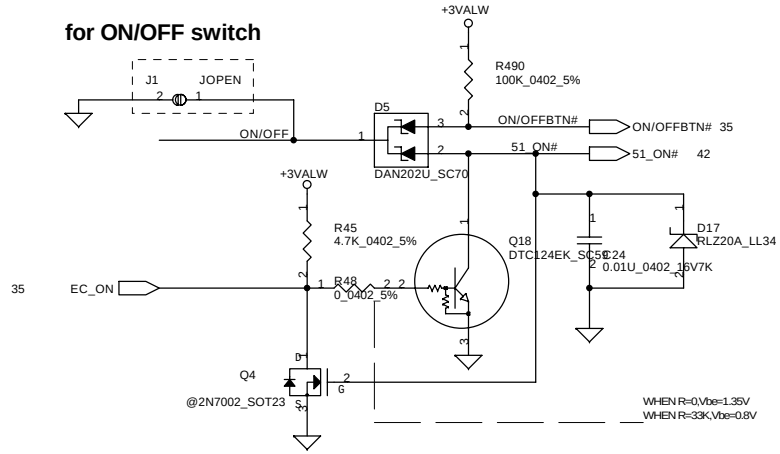

Power OK Circuit

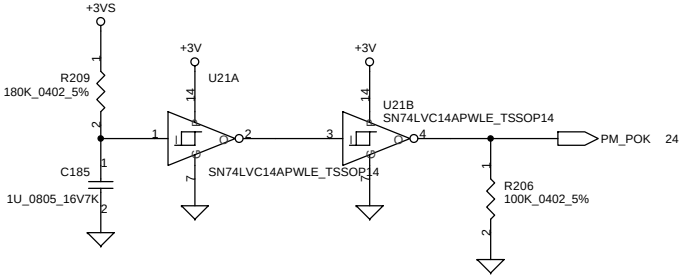

ASPIRE POWER

remove when no MEDIA/B

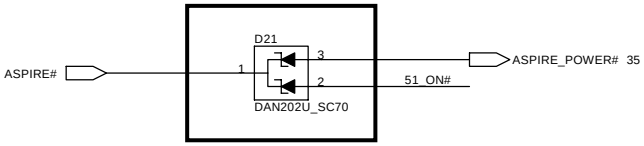

POWER/B CONN

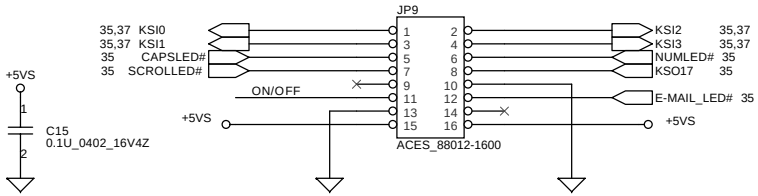

THIS SHEET OF ENGINEERING DRAWING IS THE PROPRIETARY PROPERTY OF COMPAL ELECTRONICS, INC. AND CONTAINS CONFIDENTIAL AND TRADE SECRET INFORMATION. THIS SHEET MAY NOT BE TRANSFERED FROM THE CUSTODY OF THE COMPETENT DIVISION OF R&D DEPARTMENT EXCEPT AS AUTHORIZED BY COMPAL ELECTRONICS, INC. NEITHER THIS SHEET NOR THE INFORMATION IT CONTAINS MAY BE USED BY OR DISCLOSED TO ANY THIRD PARTY WITHOUT PRIOR WRITTEN CONSENT OF COMPAL ELECTRONICS, INC.

Compal Electronics, Inc.		
Title: SCHEMATIC M/B LA-2242		
Size: B	Document Number: 401289	Rev: 2A
Date: 星期一, 四月 19, 2004	Sheet 88 of 101	

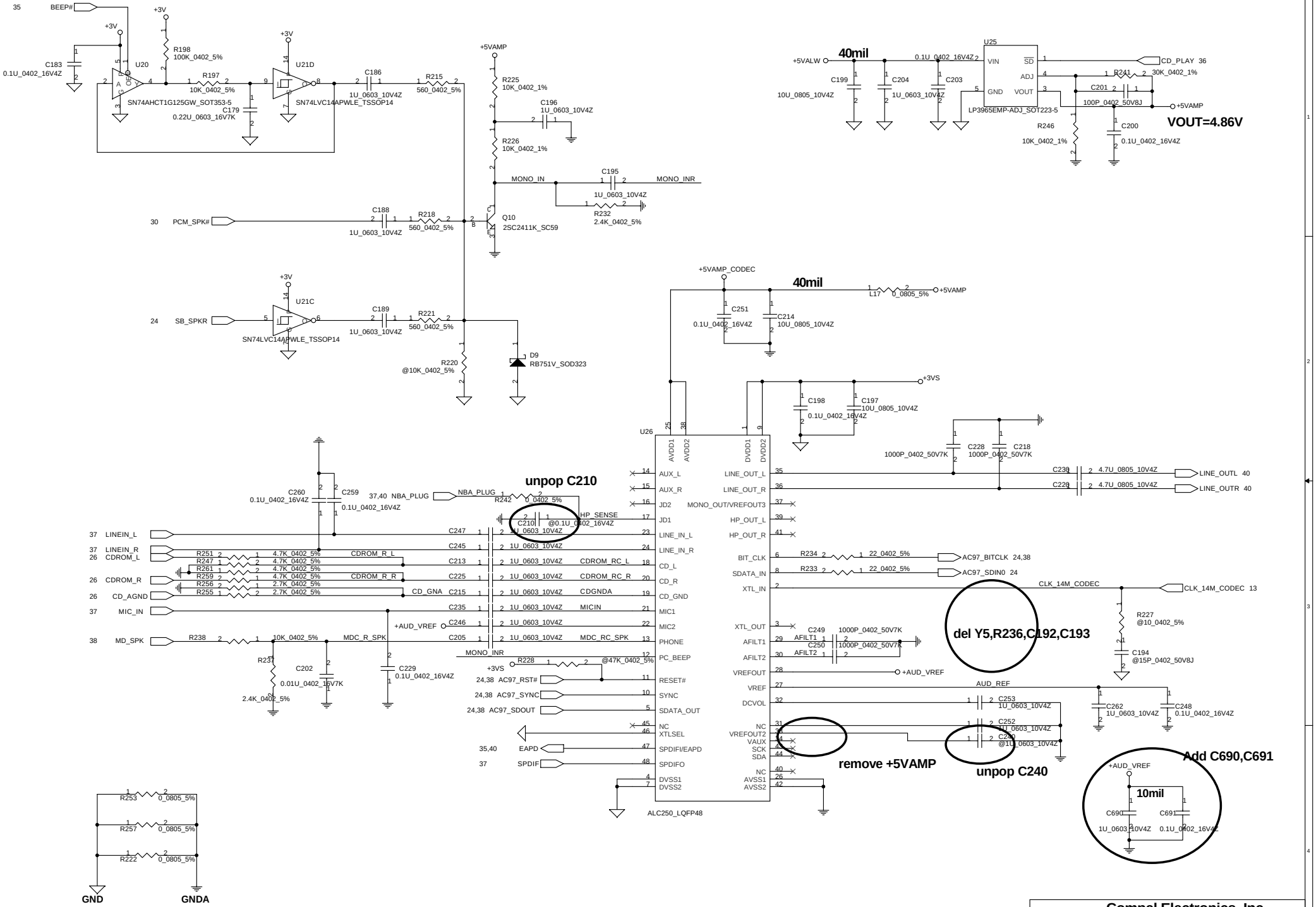

THIS SHEET OF ENGINEERING DRAWING IS THE PROPRIETARY PROPERTY OF COMPAL ELECTRONICS, INC. AND CONTAINS CONFIDENTIAL AND TRADE SECRET INFORMATION. THIS SHEET MAY NOT BE TRANSFERED FROM THE CUSTODY OF THE COMPETENT DIVISION OF R&D DEPARTMENT EXCEPT AS AUTHORIZED BY COMPAL ELECTRONICS, INC. NEITHER THIS SHEET NOR THE INFORMATION IT CONTAINS MAY BE USED BY OR DISCLOSED TO ANY THIRD PARTY WITHOUT PRIOR WRITTEN CONSENT OF COMPAL ELECTRONICS, INC.

Compal Electronics, Inc.

Title: SCHEMATIC M/B LA-2242

Size: Custom | Document Number: 401289 | Rev: 2A

Date: 星期一, 四月 19, 2004 | Sheet 89 of 101

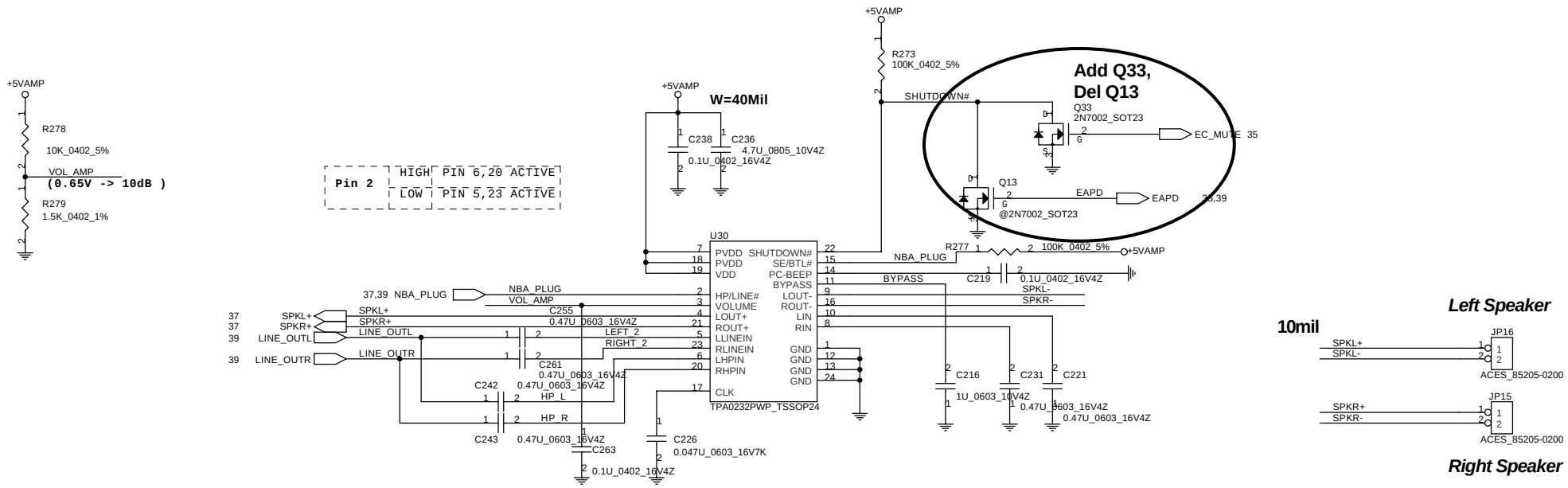

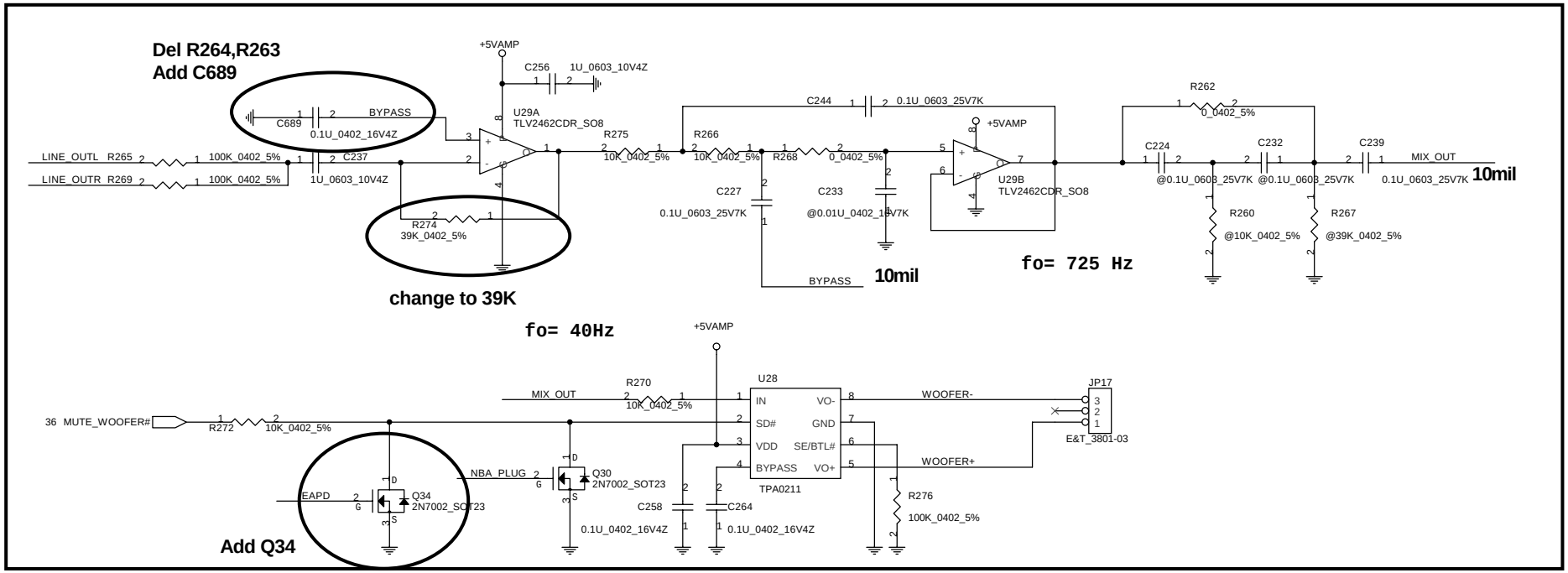

THIS SHEET OF ENGINEERING DRAWING IS THE PROPRIETARY PROPERTY OF COMPAL ELECTRONICS, INC. AND CONTAINS CONFIDENTIAL AND TRADE SECRET INFORMATION. THIS SHEET MAY NOT BE TRANSFERED FROM THE CUSTODY OF THE COMPETENT DIVISION OF R&D DEPARTMENT EXCEPT AS AUTHORIZED BY COMPAL ELECTRONICS, INC. NEITHER THIS SHEET NOR THE INFORMATION IT CONTAINS MAY BE USED BY OR DISCLOSED TO ANY THIRD PARTY WITHOUT PRIOR WRITTEN CONSENT OF COMPAL ELECTRONICS, INC.

Compal Electronics, Inc.		
Title: SCHEMATIC M/B LA-2242		
Size: B	Document Number: 401289	Rev: 2A
Date: 星期一, 四月 19, 2004	Sheet 90 of 101	

+3VALW to +3V Transfer

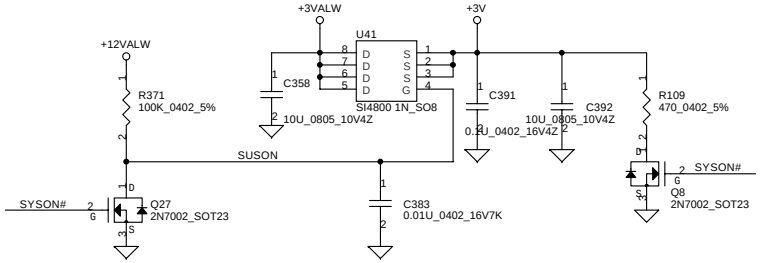

+5VALW to +5VS Transfer

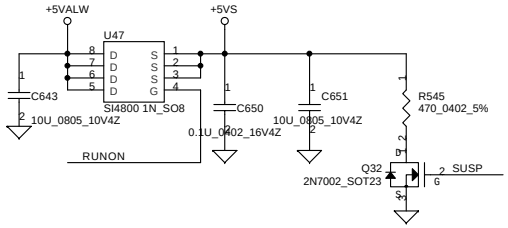

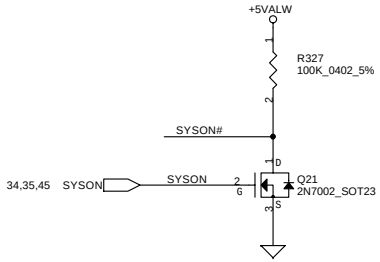

+3VALW to +3VS Transfer

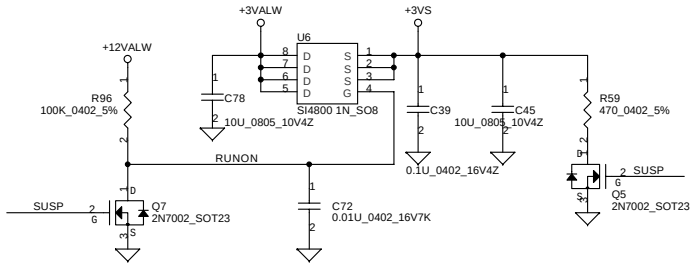

+1.5VALW to +1.5VS Transfer

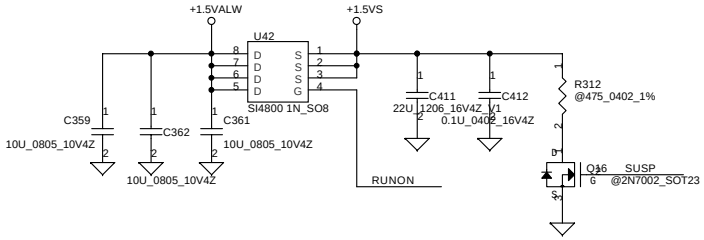

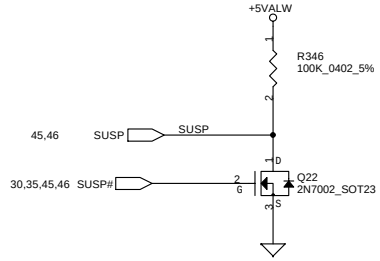

remove on Drongo4

+2.5V to +2.5VS Transfer

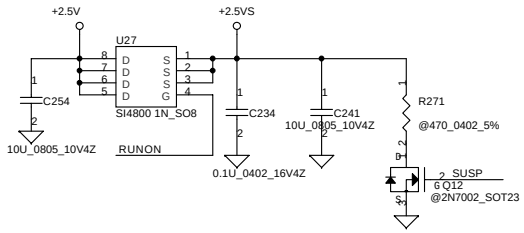

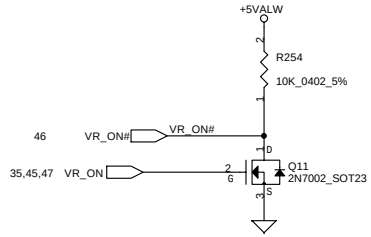

THIS SHEET OF ENGINEERING DRAWING IS THE PROPRIETARY PROPERTY OF COMPAL ELECTRONICS, INC. AND CONTAINS CONFIDENTIAL AND TRADE SECRET INFORMATION. THIS SHEET MAY NOT BE TRANSFERED FROM THE CUSTODY OF THE COMPETENT DIVISION OF R&D DEPARTMENT EXCEPT AS AUTHORIZED BY COMPAL ELECTRONICS, INC. NEITHER THIS SHEET NOR THE INFORMATION IT CONTAINS MAY BE USED BY OR DISCLOSED TO ANY THIRD PARTY WITHOUT PRIOR WRITTEN CONSENT OF COMPAL ELECTRONICS, INC.

Compal Electronics, Inc.		
Title: SCHEMATIC M/B LA-2242		
Size	Document Number: 401289	Rev 2A
Date: 星期一, 四月 19, 2004	Sheet 91 of 101	

Detector

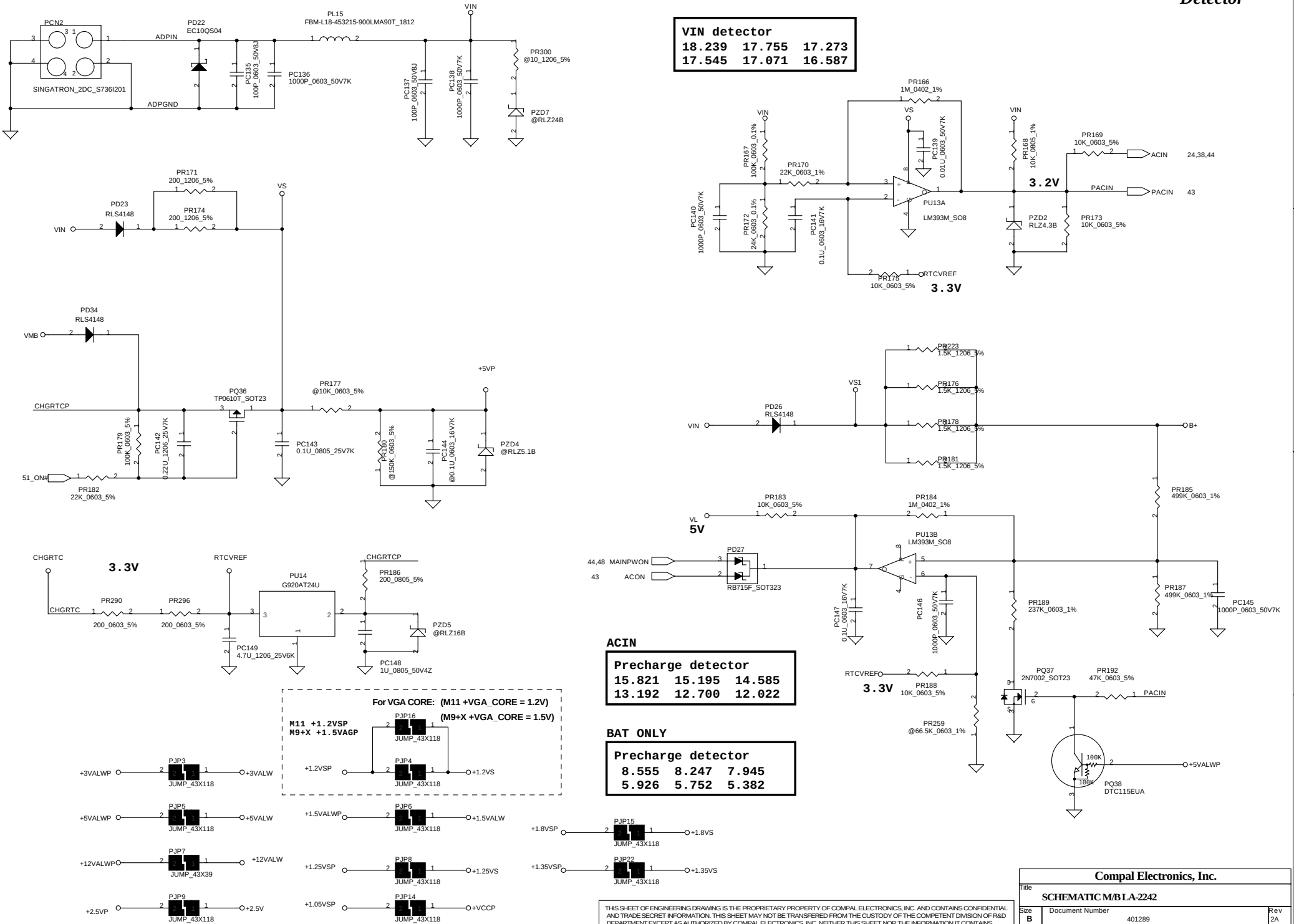

THIS SHEET OF ENGINEERING DRAWING IS THE PROPRIETARY PROPERTY OF COMPAL ELECTRONICS, INC. AND CONTAINS CONFIDENTIAL AND TRADE SECRET INFORMATION. THIS SHEET MAY NOT BE TRANSFERED FROM THE CUSTODY OF THE COMPETENT DIVISION OF R&D DEPARTMENT EXCEPT AS AUTHORIZED BY COMPAL ELECTRONICS, INC. NEITHER THIS SHEET NOR THE INFORMATION IT CONTAINS MAY BE USED BY OR DISCLOSED TO ANY THIRD PARTY WITHOUT PRIOR WRITTEN CONSENT OF COMPAL ELECTRONICS, INC.

Compal Electronics, Inc.			
Title: SCHEMATIC M/B LA-2242			
Size: B	Document Number: 401289		Rev: 2A
Date: 星期一, 四月 19, 2004	Sheet 92 of 101		

Charger

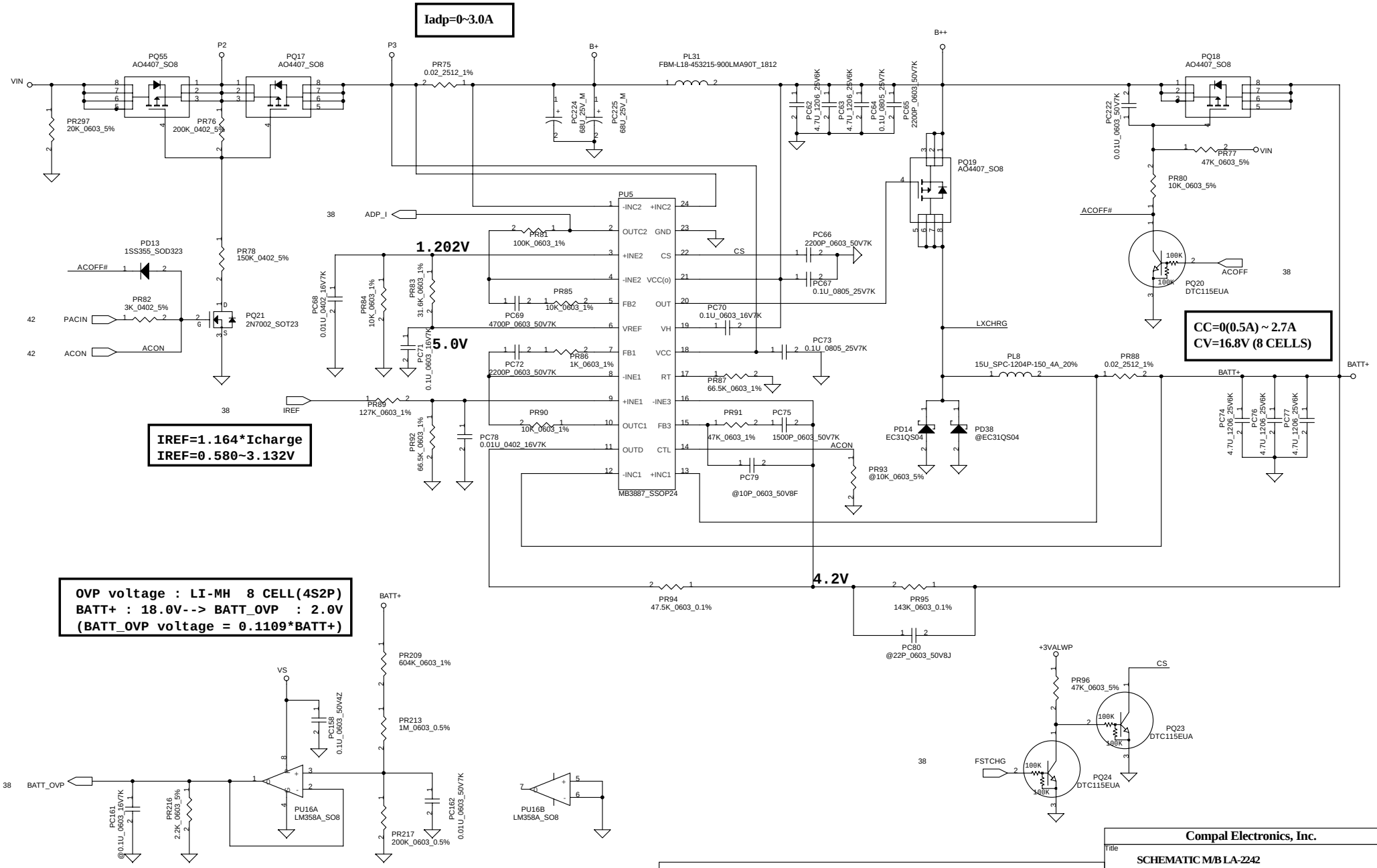

THIS SHEET OF ENGINEERING DRAWING IS THE PROPRIETARY PROPERTY OF COMPAL ELECTRONICS, INC. AND CONTAINS CONFIDENTIAL AND TRADE SECRET INFORMATION. THIS SHEET MAY NOT BE TRANSFERED FROM THE CUSTODY OF THE COMPETENT DIVISION OF R&D DEPARTMENT EXCEPT AS AUTHORIZED BY COMPAL ELECTRONICS, INC. NEITHER THIS SHEET NOR THE INFORMATION IT CONTAINS MAY BE USED BY OR DISCLOSED TO ANY THIRD PARTY WITHOUT PRIOR WRITTEN CONSENT OF COMPAL ELECTRONICS, INC.

Compal Electronics, Inc.			
Title: SCHEMATIC M/B LA-2242			
Size: B	Document Number: 401289		Rev: 2A
Date: 星期一, 四月 19, 2004	Sheet 93 of 101		

+3.3VALWP/+5VALWP/+12VVALWP

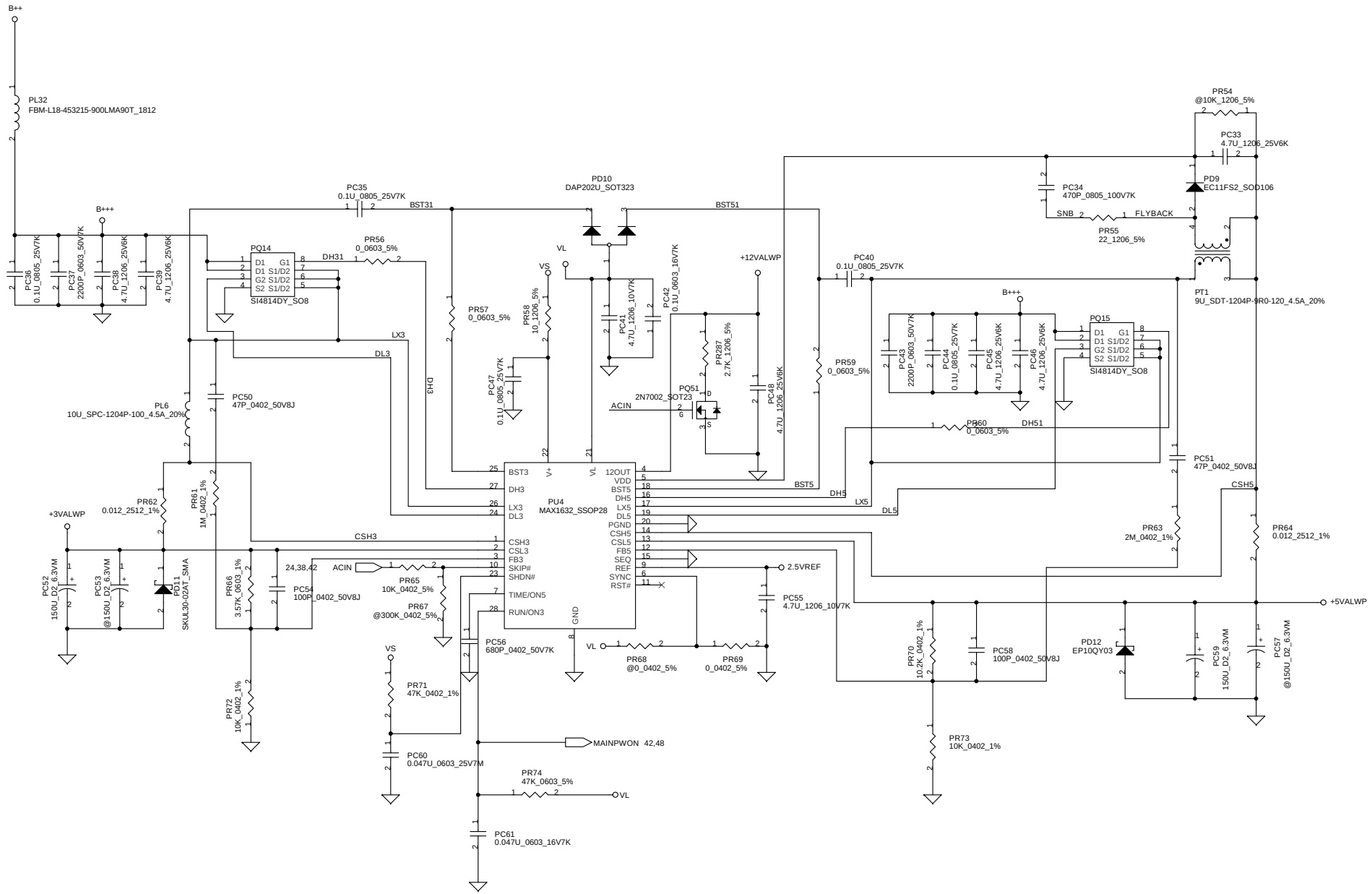

Compal Electronics, Inc.

Title

SCHEMATIC M/B LA-2242

Size	Document Number	Rev
B	401289	2A

Date: 星期一, 四月 19, 2004 Sheet 94 of 101

THIS SHEET OF ENGINEERING DRAWING IS THE PROPRIETARY PROPERTY OF COMPAL ELECTRONICS, INC. AND CONTAINS CONFIDENTIAL AND TRADE SECRET INFORMATION. THIS SHEET MAY NOT BE TRANSFERED FROM THE CUSTODY OF THE COMPETENT DIVISION OF R&D DEPARTMENT EXCEPT AS AUTHORIZED BY COMPAL ELECTRONICS, INC. NEITHER THIS SHEET NOR THE INFORMATION IT CONTAINS MAY BE USED BY OR DISCLOSED TO ANY THIRD PARTY WITHOUT PRIOR WRITTEN CONSENT OF COMPAL ELECTRONICS, INC.

+2.5VP/+1.2VSP/+1.35VSP

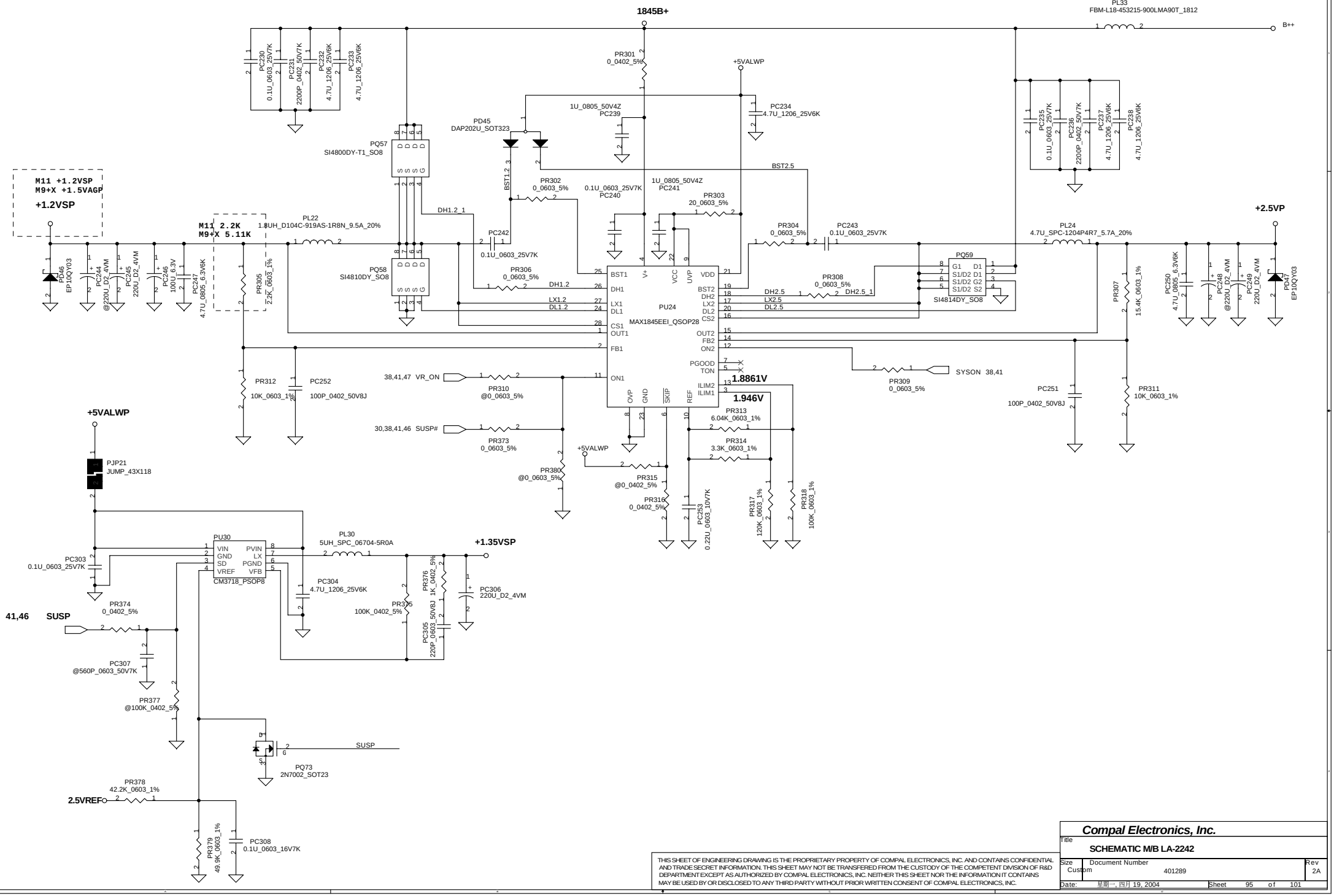

THIS SHEET OF ENGINEERING DRAWING IS THE PROPRIETARY PROPERTY OF COMPAL ELECTRONICS, INC. AND CONTAINS CONFIDENTIAL AND TRADE SECRET INFORMATION. THIS SHEET MAY NOT BE TRANSFERED FROM THE CUSTODY OF THE COMPETENT DIVISION OF R&D DEPARTMENT EXCEPT AS AUTHORIZED BY COMPAL ELECTRONICS, INC. NEITHER THIS SHEET NOR THE INFORMATION IT CONTAINS MAY BE USED BY OR DISCLOSED TO ANY THIRD PARTY WITHOUT PRIOR WRITTEN CONSENT OF COMPAL ELECTRONICS, INC.

Compal Electronics, Inc.

Title: SCHEMATIC M/B LA-2242

Size	Document Number	Rev
Custom	401289	2A

Date: 星期一, 四月 19, 2004 | Sheet 95 of 101

+1.5VALWP/+1.8VSP/+1.25VSP/+1.05VSP

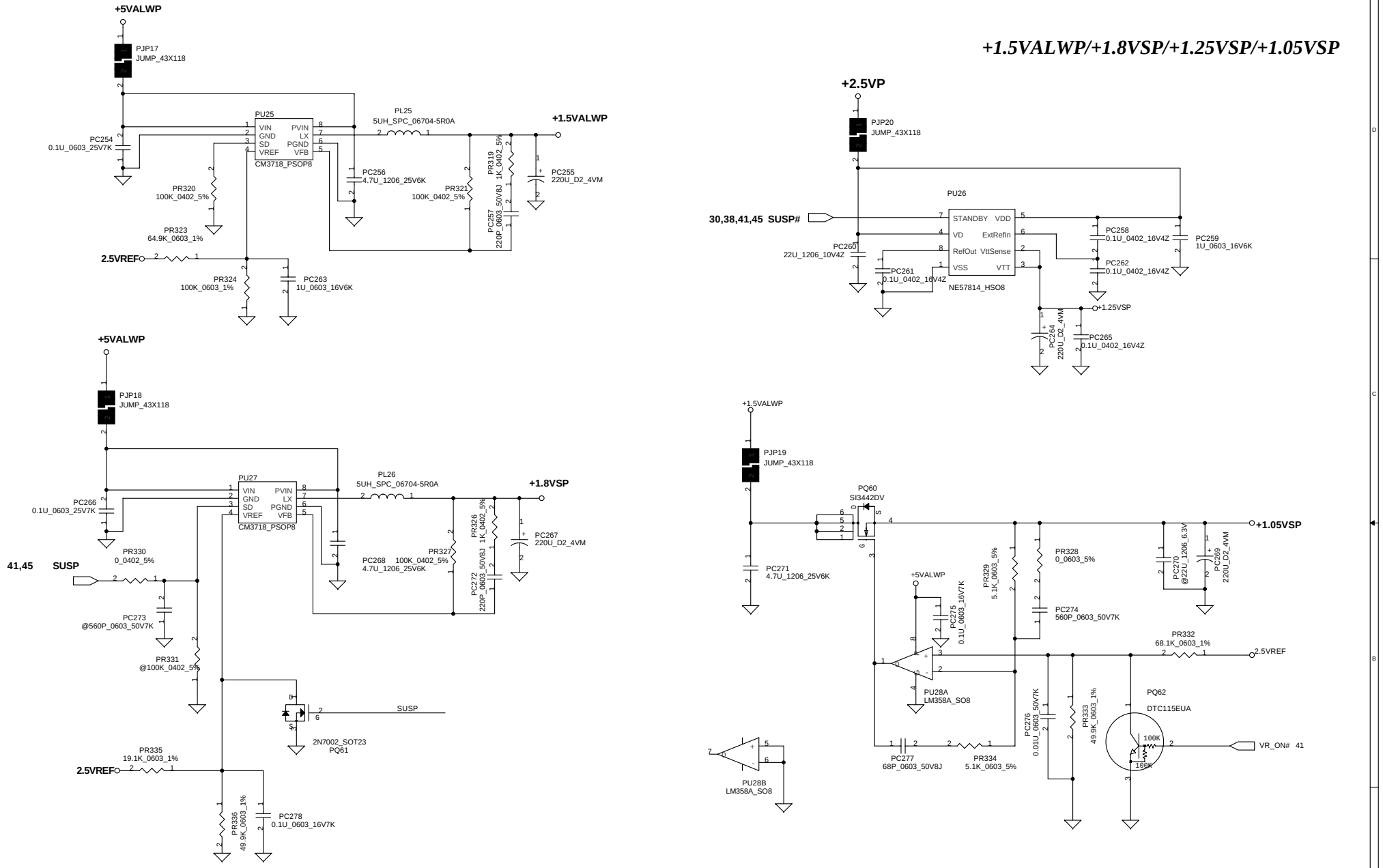

THIS SHEET OF ENGINEERING DRAWING IS THE PROPRIETARY PROPERTY OF COMPAL ELECTRONICS, INC. AND CONTAINS CONFIDENTIAL AND TRADE SECRET INFORMATION. THIS SHEET MAY NOT BE TRANSFERED FROM THE CUSTODY OF THE COMPETENT DIVISION OF R&D DEPARTMENT EXCEPT AS AUTHORIZED BY COMPAL ELECTRONICS, INC. NEITHER THIS SHEET NOR THE INFORMATION IT CONTAINS

Compal Electronics, Inc.

Title: SCHEMATIC M/B LA-2242

Size	Document Number	Rev
Custom	401289	2A

Date: 星期一, 四月 19, 2004 Sheet 96 of 101

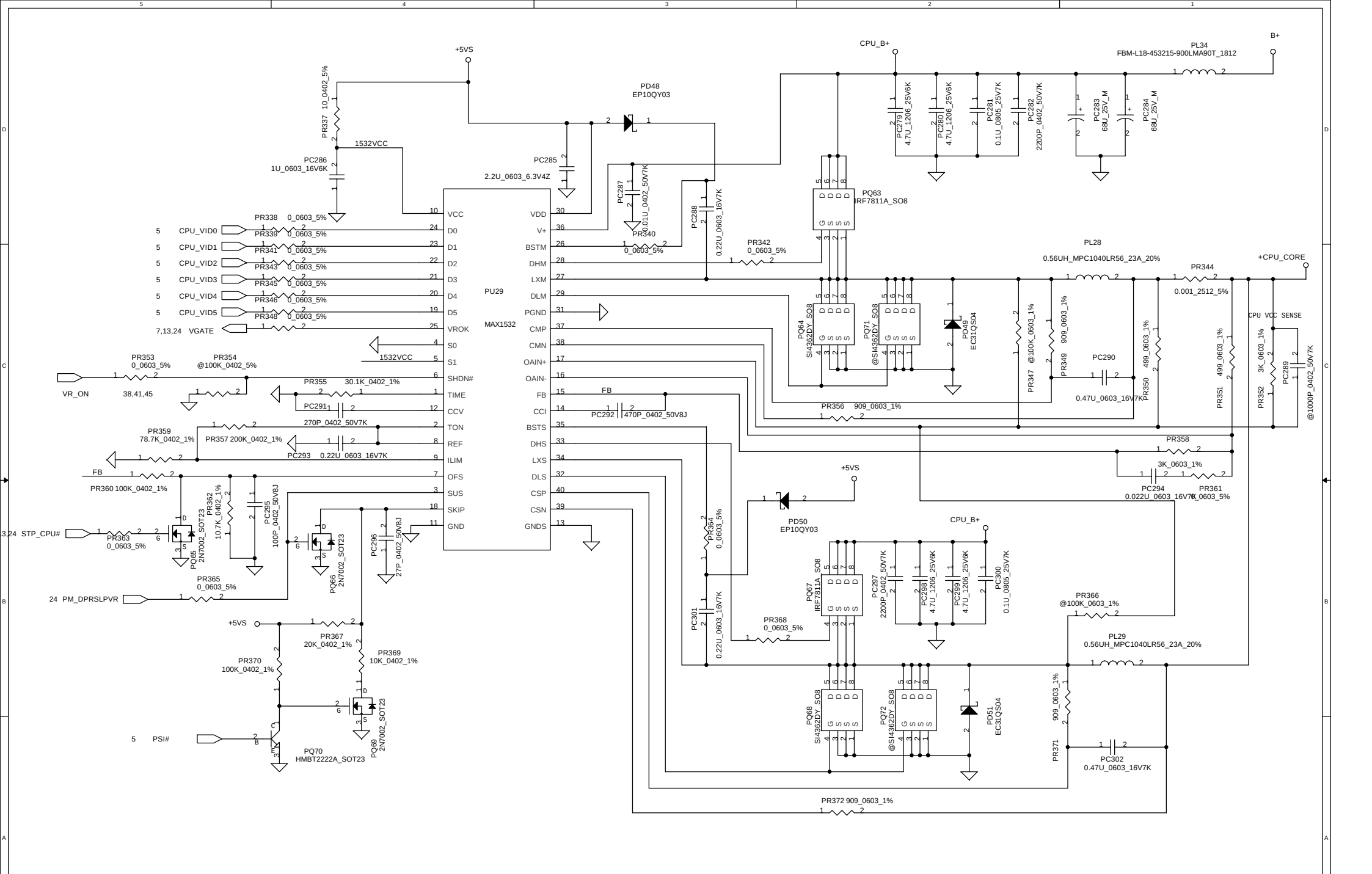

THIS SHEET OF ENGINEERING DRAWING IS THE PROPRIETARY PROPERTY OF COMPAL ELECTRONICS, INC. AND CONTAINS CONFIDENTIAL AND TRADE SECRET INFORMATION. THIS SHEET MAY NOT BE TRANSFERED FROM THE CUSTODY OF THE COMPETENT DIVISION OF R&D DEPARTMENT EXCEPT AS AUTHORIZED BY COMPAL ELECTRONICS, INC. NEITHER THIS SHEET NOR THE INFORMATION IT CONTAINS MAY BE USED BY OR DISCLOSED TO ANY THIRD PARTY WITHOUT PRIOR WRITTEN CONSENT OF COMPAL ELECTRONICS, INC.

Compal Electronics, Inc.

Title: **SCHEMATIC M/B LA-2242**

Size	Document Number	Rev
Custom	401289	2A

Date: 星期一, 四月 19, 2004 Sheet 97 of 101

PH1 under CPU botten side :
CPU thermal protection at 90 +-3 degree C
Recovery at 50 +-3 degree C

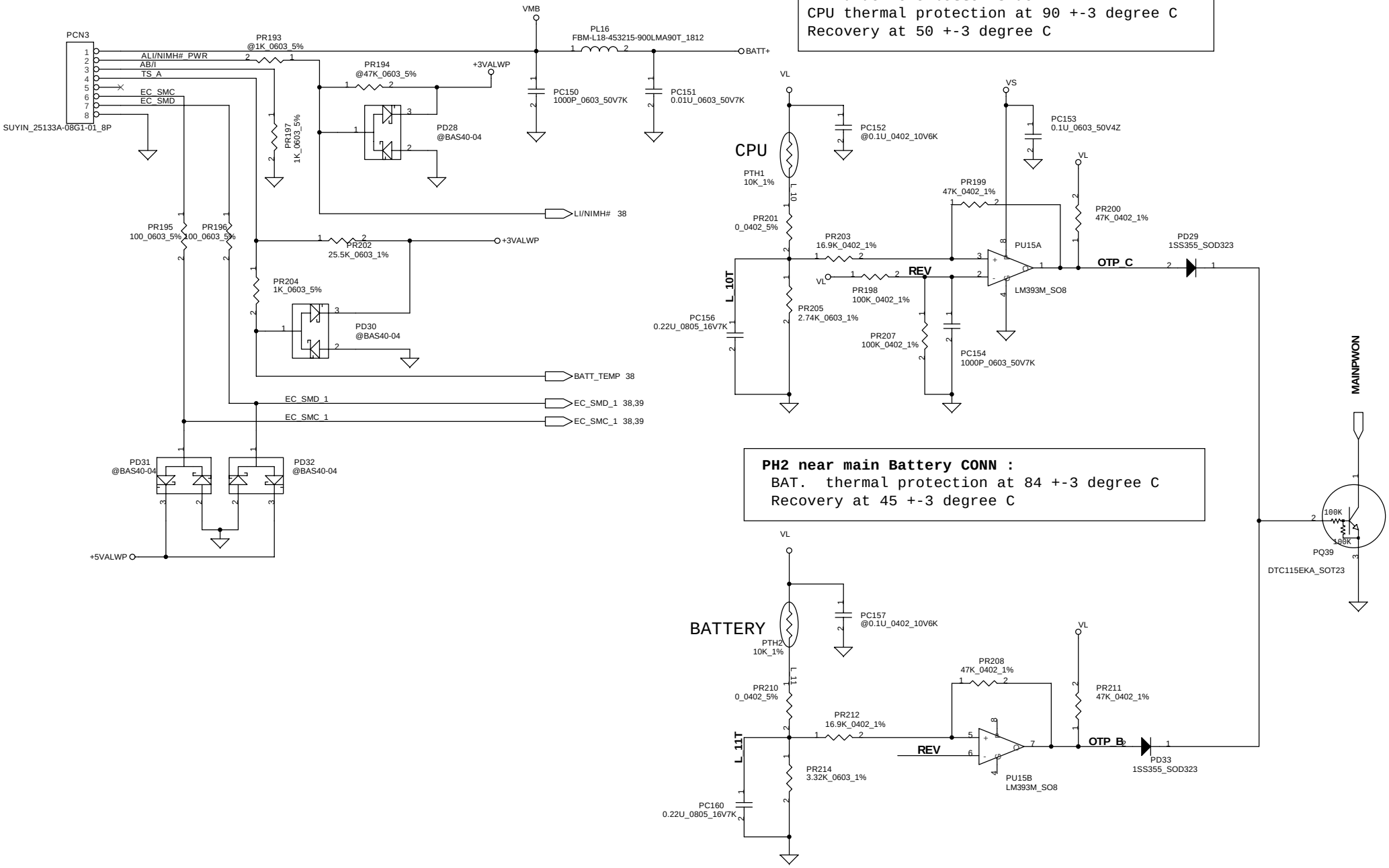

PH2 near main Battery CONN :
BAT. thermal protection at 84 +-3 degree C
Recovery at 45 +-3 degree C

THIS SHEET OF ENGINEERING DRAWING IS THE PROPRIETARY PROPERTY OF COMPAL ELECTRONICS, INC. AND CONTAINS CONFIDENTIAL AND TRADE SECRET INFORMATION. THIS SHEET MAY NOT BE TRANSFERED FROM THE CUSTODY OF THE COMPETENT DIVISION OF R&D DEPARTMENT EXCEPT AS AUTHORIZED BY COMPAL ELECTRONICS, INC. NEITHER THIS SHEET NOR THE INFORMATION IT CONTAINS MAY BE USED BY OR DISCLOSED TO ANY THIRD PARTY WITHOUT PRIOR WRITTEN CONSENT OF COMPAL ELECTRONICS, INC.

Compal Electronics, Inc.

Title: **SCHEMATIC M/B LA-2242**

Size: B | Document Number: **401289** | Rev: 2A

Date: 星期一, 四月 19, 2004 | Sheet 98 of 101

Version change list (P.I.R. List)

Power section

Item	Reason for change	PG#	Modify List	Date	B.Ver#
1	1.05V oscillate	46	Delete PC270 and add PC269 (220u D2).	2004.02.07	
2	The single "SUSP" will be pull down to 2.2V	45 46	Delete PR331 and PR377.	2004.02.07	
3	To reduce the response time, when charger into CP mode.	43	Change PR81 from 22K to 100K.	2004.02.07	
4	For EMI request	43;44;45;47	Delete PL5,PL7,PL23,PL27 Change PQ63 and PQ67 to IRF7821 Change PR340 and PR364 to 2.2 ohm	2004.02.11	
5	To speed up 1.8V, 1.35V 1nd 1.05V	45 46	Change PR336, PR333 and PR379 to 49.9K Change PC278 and PC308 to 0.1uF Change PR335 to 19.1K Change PR332 to 68.1K Change PR378 to 42.2K	2004.02.12	
6	To reduce +3VALWP power plane negative voltage	44	Change PD11 to SKUL30-02AT	2004.03.01	
7	For EMI request	43;44;45;47	Add PL31,PL32,PL33,PL34 Change PR342 and PR368 to 2.2 ohm Change PR340 and PR364 to 0 ohm	2004.03.01	
8	For EMI request	47	Change PR342 and PR368 to 0 ohm Change PQ63 and PQ67 to IRF7811A Change PQ64 and PQ68 to SI4362	2004.03.16	
9	Adjust Vin detector	42	Change PR167 to 100K_0603_0.1% Change PR172 to 24K_0603_0.1% Change PR170 to 22K_0603_1% Change PR166 to 1M_0402_1%	2004.03.16	

THIS SHEET OF ENGINEERING DRAWING IS THE PROPRIETARY PROPERTY OF COMPAL ELECTRONICS, INC. AND CONTAINS CONFIDENTIAL AND TRADE SECRET INFORMATION. THIS SHEET MAY NOT BE TRANSFERED FROM THE CUSTODY OF THE COMPETENT DIVISION OF R&D DEPARTMENT EXCEPT AS AUTHORIZED BY COMPAL ELECTRONICS, INC. NEITHER THIS SHEET NOR THE INFORMATION IT CONTAINS MAY BE USED BY OR DISCLOSED TO ANY THIRD PARTY WITHOUT PRIOR WRITTEN CONSENT OF COMPAL ELECTRONICS, INC.

Version change list (P.I.R. List) HW section Page 1 of 1

Item	Reason for change	PG#	Modify List	Date	
1	PCI_AD[31..0],PCI_CBE#[0..3] reserved	P.27	Correct PCI_AD[31..0],PCI_CBE#[0..3]	2/4	EVT(Rev02)
2	VR_ON# pull up resistor	P.41	Change R254 from 100K to 10K	2/4	EVT(Rev02)
3	AGP Isolating circuit	P.7	Mount U39, unmount R372,R377,R388,R414	2/4	EVT(Rev02)
4	Change Codec to ALC250	P.39	Change U26 to ACL250, mount R242	2/4	EVT(Rev02)
5	Modify VGA strap pin	P.14	Mount R479,R489; unmount R437, R441,R443,R448	2/4	EVT(Rev02)
6	Enter Windows "Beep" noise	P.39	Del C209 and let U26 pin14,15,16 no connect	2/6	DVT(Rev03)
7	For LS-1993 NBA_PLUG signal	P.37	Del R541,Q31	2/6	DVT(Rev03)
8	For DFX	P.24,36,38	Change J1,J2,H22 footprint	2/6	DVT(Rev03)
9	Change USB Power Switch to RT9701CBL	P.34	Change U34,U35, Del R291,R292,R313,R322,R329 Add R557,R558,R559,R560,R562,C685,C686	2/8	DVT(Rev03)
10	Change LAN LED circuit	P.27	Add R562	2/8	DVT(Rev03)
11	For EMI	P.13,16,17 ,23,35,37	Del L15,L16,L31,L28,L23,R542,R543,R283,R284,R471	2/11	DVT(Rev03)
12	Unpoped 0.1UF capacitor for EMI request	P.12,16,17, 26,27,29,30	Del some 0.1UF capacitor for EMI request	2/12	DVT(Rev03)
13	For +LVDDR25 ripple	P.16	Unpoped C518 for LDO issue	3/4	PVT(Rev04)
14	Duplicate AGP_BUSY pill-up	P.24	Del R103	3/4	PVT(Rev04)
15	For BCM5788 +3V_LAN 0.2V leakage issue	P.27	Change VESD[1..3] to +3V_LAN(system power)	3/4	PVT(Rev04)
16	For BCM5788/BCM4401 difference	P.27,28	Del R369 and change T1 to 24ST0023-3 when use BCM4401	3/4	PVT(Rev04)
17	Vishay FIR issue(Nokia 61XX series)	P.32,33	Change U31 to TDFU6102; Poped R97 and change to 10K	3/4	PVT(Rev04)
18	For audio issue	P.35,40	Add Q33,Q34 and EC_MUTE to U17 pin.69 Connect BYPASS from U30 to U29, change R274 to 39K Connect EAPD to EC pin.29	3/4	PVT(Rev04)
19	To simplify Codec circuit	P.36	Unpoped C210,C252, Del Y5,R236,C192,C193 Add C690,C691	3/4	PVT(Rev04)
20	For EMI	P.37	Add C688,CP11,CP12	3/4	PVT(Rev04)

THIS SHEET OF ENGINEERING DRAWING IS THE PROPRIETARY PROPERTY OF COMPAL ELECTRONICS, INC. AND CONTAINS CONFIDENTIAL AND TRADE SECRET INFORMATION. THIS SHEET MAY NOT BE TRANSFERED FROM THE CUSTODY OF THE COMPETENT DIVISION OF R&D DEPARTMENT EXCEPT AS AUTHORIZED BY COMPAL ELECTRONICS, INC. NEITHER THIS SHEET NOR THE INFORMATION IT CONTAINS MAY BE USED BY OR DISCLOSED TO ANY THIRD PARTY WITHOUT PRIOR WRITTEN CONSENT OF COMPAL ELECTRONICS, INC.

Version change list (P.I.R. List) HW section Page 2 of 2

Item	Reason for change	PG#	Modify List	Date	
1	Add NC solution for M9+X Ball D19/R4	P.16	Add R103,R236	4/13	MP(Rev2.0)
2	Switch +1.5VS(M11) & +1.8VS (M9+X)	P.16	Add R283,R284	4/13	MP(Rev2.0)
3	Switch +VDDR25(M11)& +VDD_PNLIO1.8(M9+X)	P.16	Add R313	4/13	MP(Rev2.0)
4	Add ENBKL inverse ckt for M9+X	P.35	Add R263,R264,Q31	4/13	MP(Rev2.0)
5	For EMI	P.37	Add L15,L16	4/13	MP(Rev2.0)
6					
7					
8					
9					
10					
11					
12					
13					
14					
15					
16					
17					
18					
19					
20					

THIS SHEET OF ENGINEERING DRAWING IS THE PROPRIETARY PROPERTY OF COMPAL ELECTRONICS, INC. AND CONTAINS CONFIDENTIAL AND TRADE SECRET INFORMATION. THIS SHEET MAY NOT BE TRANSFERED FROM THE CUSTODY OF THE COMPETENT DIVISION OF R&D DEPARTMENT EXCEPT AS AUTHORIZED BY COMPAL ELECTRONICS, INC. NEITHER THIS SHEET NOR THE INFORMATION IT CONTAINS MAY BE USED BY OR DISCLOSED TO ANY THIRD PARTY WITHOUT PRIOR WRITTEN CONSENT OF COMPAL ELECTRONICS, INC.

www.s-manuals.com